# THE IDEAL

## INSTALLATION & SERVICING MANUAL

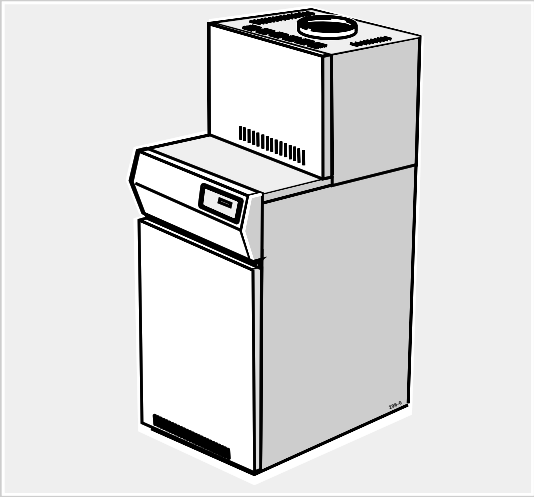

## *Concord*

## *CXC 48 - 116*

Installers guide to commercial central heating boilers

spares & parts online
IBASIS.co.uk©

Ideal BOILERS

**CAUTION. To avoid the possibility of injury during the installation, servicing or cleaning of this appliance, care should be taken when handling edges of sheet steel components.**

# CONTENTS

**Air Supply**. ..... 9

**Boiler Assembly - exploded view**. ..... 10

**Boiler Clearances**. ..... 6

**Burner Assemblies - exploded views**. .....
**CXC 48-70**. ..... 28
**CXC 94-116**. ..... 29

**Casing Assembly**. ..... 13

**Commissioning**. ..... 18

**Condensate Drain Connection** ..... 12

**Controls**. ..... 5

**Electrical Connections**. ..... 15

**Electrical Supply**. ..... 10

**Fault Finding**. ..... 33

**Flue System**. ..... 9

**Gas Connections**. ..... 13

**Gas Safety Regulations** ..... 3

**Gas Supply**. ..... 10

**Hydraulic Resistance**. ..... 6

**Initial Lighting**. ..... 18

**Installation**. ..... 10

**Mandatory Requirements**. ..... 9

**Option Kits**. ..... 5

**Pump**. ..... 7

**Servicing**. ..... 25

**Short List of Parts**. ..... 36

**Static Head Requirements**. ..... 7

**Ventilation**. ..... 9

**Water Circulation**. ..... 7

**Water Connections**. ..... 5

**Water Treatment**. ..... 8

**Wiring Diagrams**. ..... 16

# INTRODUCTION

## CONSTRUCTION

### *BOILER BODY*

The **Concord CXC** boiler consists of 2 basic parts; a conventional Concord CXD boiler; plus an additional heat exchanger.

The **Concord CXC** boiler body is constructed from cast iron sections, insulated by a foil backed fibre glass blanket. It is mounted on a sheet steel combustion chamber.

An aluminiumised mild steel flue collector hood and stainless steel condensate sump is fitted on top of this heat exchanger. The sump supports the secondary heat exchanger which is constructed from aluminium finned tubes between aluminium and cast iron headers. This heat exchanger is also insulated by a foil backed fibre glass blanket.

Above the primary heat exchanger an induced draught fan is fitted - capable of overcoming the resistance of a 30m length of 6" flue pipe. The boiler is supplied with header pipework between the primary and secondary heat exchanger.

Within this pipework, a 'shunt' pump is provided to ensure an adequate flow through the primary heat exchanger, independently of the system pump. This also ensures that a sufficient temperature is maintained in the primary heat exchanger to prevent corrosion.

### *CASING*

The combined boiler bodies are enclosed in a white, stove enamelled casing which incorporates a control panel fascia.

The casing is specially designed to ensure easy access for both servicing and cleaning of both heat exchangers.

### *BURNERS*

The 3 burners are of stainless steel construction.

### Gas Safety (Installation and Use) Regulations, 1994, amendments 1996 or rules in force.

It is the law that **all** gas appliances are installed and serviced by a CORGI registered installer (identified by ❀) in accordance with the above regulations. Failure to install appliances correctly could lead to prosecution. It is in your own interest, and that of safety, to ensure that the law is complied with.

The **Concord CXC 48/116** range of boilers has been tested and certified by British Gas to prEN656 for use with ***Natural gas only.***

**Note.** *The **CXC 48 and CXC 70** boilers are intended for use as COMMERCIAL BOILERS and are NOT certified for use in domestic applications. A domestic installation is defined as an installation where the boiler takes its combustion air from a living space or from a room directly or indirectly connected with the living space. It is important, therefore, that no external control devices - e.g. flue dampers, economisers etc., are directly connected to this appliance unless covered by these Installation and Servicing Instructions or otherwise recommended by* **Caradon Plumbing Limited** *in writing. If in doubt please enquire.*

*Any direct connection of a control device not approved by* **Caradon Plumbing Limited** *could invalidate the British Gas Certification, the normal appliance warranty and could also infringe the Gas Safety Regulations. Table 1, Table 2 and the descriptive notes which follow contain all the essential data likely to be required by the installer.*

# GENERAL

**Table 1- Performance Data**

| Boiler | | | CXC 48 | CXC 70 | CXC 94 | CXC 116 |
|---|---|---|---|---|---|---|
| Number of sections | | | 3 | 4 | 4 | 5 |
| Boiler output High Rate | | kW | 48.83 | 69.84 | 93.65 | 116.25 |
| Condensing | | Btu/h x 1000 | 166 600 | 238 300 | 319 500 | 396 600 |
| Boiler output High Rate | | kW | 44.63 | 63.84 | 85.6 | 106.3 |
| Non-Condensing | | Btu/h x 1000 | 152 300 | 217 800 | 292 100 | 362 700 |
| Boiler Input | Gross | kW | 31.5 | 45.06 | 60.42 | 75 |
| Low Rate | | Btu/h x 1000 | 107 500 | 153 700 | 206 200 | 255 900 |
| | Nett | kW | 28.4 | 40.6 | 54.44 | 67.58 |
| | | Btu/h x 1000 | 96 900 | 138 500 | 185 800 | 230 600 |
| Boiler Input | Gross | kW | 52.5 | 75.1 | 100.7 | 125 |
| | | Btu/h x 1000 | 179 100 | 256 200 | 343 600 | 426 500 |
| High Rate | Nett | kW | 47.3 | 67.67 | 90.73 | 112.6 |
| | | Btu/h x 1000 | 161 400 | 230 900 | 309600 | 384 200 |
| Gas rate | | $m^3/h$ | 4.4 | 7.0 | 9.4 | 11.6 |
| | | $ft^3/h$ | 172 | 247 | 331 | 411 |
| Approx. flue gas 8.0% $CO_2$ & 60°C. volume (non condensing) | | $m^3/sec$ | 0.023 | 0.033 | 0.045 | 0.056 |
| High rate 8.0% $CO_2$ & 140°F. | | $ft.^3m$ | 49 | 70 | 95 | 119 |
| Manifold setting pressure | | mbar | 3.9 | 3.9 | 3.8 | 4.1 |
| Low Rate | | in.w.g. | 1.6 | 1.6 | 1.5 | 1.6 |
| Manifold setting pressure | | mbar | 11.7 | 11.8 | 10.7 | 11.5 |
| High Rate | | in.w.g. | 4.7 | 4.7 | 4.3 | 4.6 |
| Seasonal efficiency (SEDBUK)* | | | [85.8]% | [85.5]% | [86.2]% | [85.7]% |

*****The value is used in the UK government's Standard Assessment Procedure (SAP) for energy rating of dwellings.
The test data from which it has been calculated have been certified by BGplc 0087.

**Note.** *To obtain gas consumption, divide gross heat input (kW) by a calorific value of 37.8 (MJ/m³)*

**Table 2 - General Data**

| Boiler | | CXC 48 | CXC 70 | CXC 94 | CXC 116 |
|---|---|---|---|---|---|
| Number of sections | | 3 | 4 | 5 | 6 |
| Flow tappings | Rc (in. BSP) | 2 (2) - 1 at rear | | | |
| Return tappings | Rc (in. BSP) | 2 (2) - 1 at rear | | | |
| Maximum static head | metres (feet) | 45.7 (150) | | | |
| Maximum pressure | bar (p.s.i.) | 4.5 (65) | | | |
| Gas inlet connection | Rc (in. BSP) | 3/4 (3/4) | | | 1 (1 ) |
| Minimum dynamic gas pressure required at the boiler inlet | mbar *gauge* | 15.0 | 15.0 | 16.2 | 15.0 |
| | in.w.g. | 6.0 | 6.0 | 6.5 | 6.0 |
| Electricity supply | | 230 Volts- single phase, 50 Hz, fuse 5 A | | | |
| Power Consumption | Watts | 96 | 96 | 96 | 96 |
| Nominal flue size (to BS. 835) | mm (in.) | 152 (6) | 152 (6) | 152 (6) | 152 (6) |
| Diverter outlet socket internal diameter | mm | 154 | 154 | 154 | 154 |
| | in | 6 1/16 | 6 1/16 | 6 1/16 | 6 1/16 |
| Length of burner bars (overall) | mm | 377 | 497 | 617 | 737 |
| | in | 14.8 | 19.5 | 24.3 | 29.0 |
| Approx. dry weight | kg | 298 | 350 | 442 | 494 |
| | lb | 658 | 771 | 974 | 1090 |
| Water contentm | litre | 28 | 36 | 43 | 51 |
| | gal | 6.2 | 8.0 | 9.5 | 11.2 |
| Gas type | | G20 $I_{2H}$ 20 mbar | | | |

**Table 3 - Boiler Control specification** Maximum Flow Temperature 85 °C

| | |
|---|---|
| Electricity supply | 230V, 50Hz, fuse 5A |
| Ignition | 5 attempts followed by nonvolatile lockout. |
| Gas valve | High/Low and Off |
| Gas safety time | Maximum of 10 secs with 5 attempts with one min. between attempts. |
| Safety check | The control de-energises every 4 hours to check internal control functions. |
| Pump | Pump overrun operates if the flow temperature is greater than 75 °C. |
| Boiler thermostat | The boiler thermostat hysteresis is a maximum of 3 °C. |

## GAS CONTROLS

The gas controls consist of a high / low arrangement with direct burner ignition.

## ELECTRICAL CONTROLS

***WARNING**. The ON/STANDBY [1/0] button does **NOT** electrically isolate the boiler.*

The **Concord CXC range** incorporates an advanced microprocessor based control system which operates all electrical functions of the boiler including for operation, ignition, flame detection, thermostatic control, and high/low operation. In addition, the microprocessor has onboard servicing and commissioning instructions and a fault diagnosis programme.

The illuminated LED display gives a continual read-out of the boiler status and functions, but in the (unlikely) event of a fault condition, will display the fault areas.

Combustion products are drawn through the boiler by a fan and air flow is proved by a pressure switch.

The burner flame is ignited by a spark generator.

Blockage of the condensate drain is protected against by a float switch situated in the sump.

## OPTION KITS

**Pressure Gauge Kit:** A pressure gauge is available for the range of boilers. Details for fitting are included with the pressure gauge.

**Remote Indication Board (volt free)**: This provides the ability for remote indication of lockout and overheat conditions.

**Outside Sensor:** This kit provides a sensor for temperature compensation when the outside temperature changes. Each boiler needs to be individually switched on therefore a sensor is required per boiler.

## DUTY

The range of boilers is suitable for: Combined indirect pumped domestic hot water ***and*** central heating systems; Independent indirect pumped domestic hot water ***or*** central heating systems.

Fully pumped systems may be open vented or sealed.

The range of boilers is NOT suitable for:

1. Gravity DHW systems.
2. Gravity heating systems.
3. Direct domestic hot water supply.

## SYSTEM DESIGN

The water efficiency of this range of boilers is higher than conventional boilers, at any water temperature, because of the increased heat exchanger area.

At return temperatures of 55 °C and below, the differences become more marked because the water in the flue gases starts to condense, releasing its latent heat. In general, the lower the return temperature (down to its minimum temperature of 35 °C to protect the primary heat exchanger) the better the boiler efficiency.

In new systems it is best to design for the lowest flow and return temperatures that are practical (subject to the lower limit mentioned above). Of course, the lower the mean water temperature the greater must be the heating surface area.

### PERFORMANCE

The efficiency of the **Concord CXC** range of boilers is related to the return water temperature of the boiler. This graph shows that, in order to achieve maximum efficiency at any given load, the system controls should be used in a manner which maintains the lowest return temperature commensurate with system performance

**Graph 1 - Boiler efficiency**

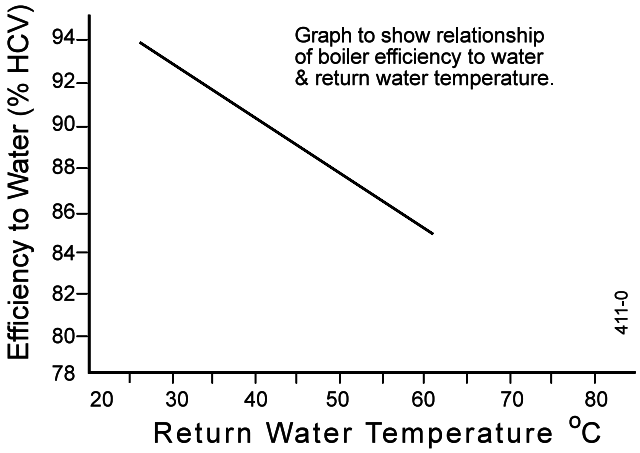


## 1 WATER CONNECTIONS

Flow and return connections are 2" BSP.

**Safety Valve**

A safety valve must be sized and fitted in accordance with BS. 6644 for every type of system. The valve should be set at 0.7 bar (10 lb/in.$^2$) above the operating pressure in the boiler. The maximum safety valve setting is 0.7 bar (10 lb/in.$^2$) above the maximum design operating pressure of 4.5 bar (65 lb/in.$^2$).

**Cold Feed/Open Vent**

The independent cold feed and the open vent must comply with BS. 6644 and be of the following minimum size.

| Boiler Size | Cold Feed | Open Vent |
|---|---|---|
| **CXC** 48 -70 | 3/4" | 1" |
| **CXC** 94 -116 | 1" | 1 1/4" |

Sealed system filling point - refer to Frame 8

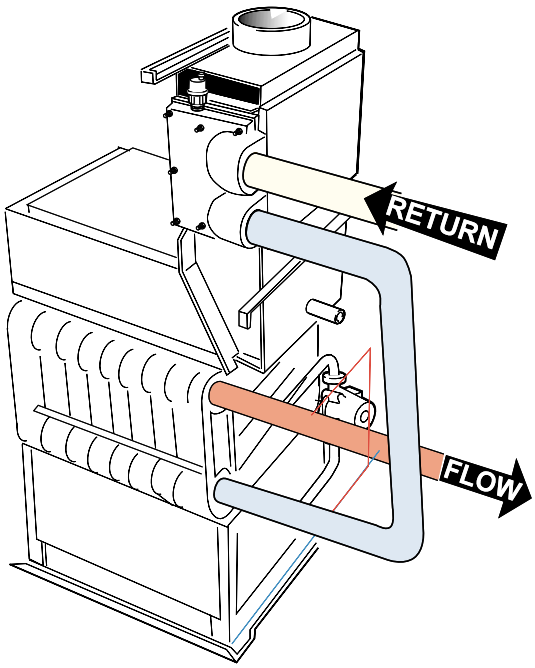

**Graph 2 - Heat Load/ Water Volume**

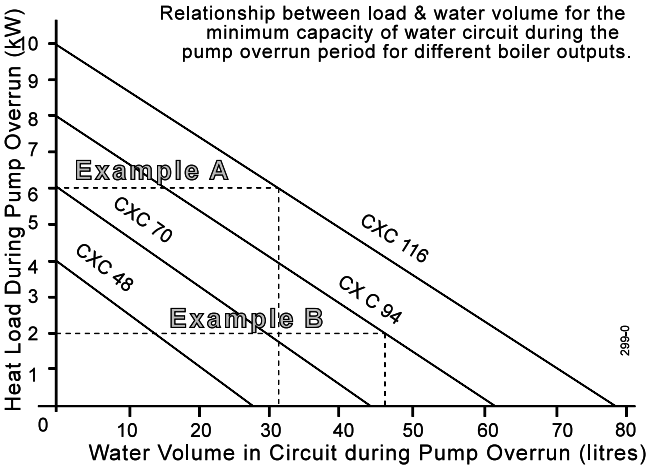


**Graph 3 - Hydraulic Resistance**

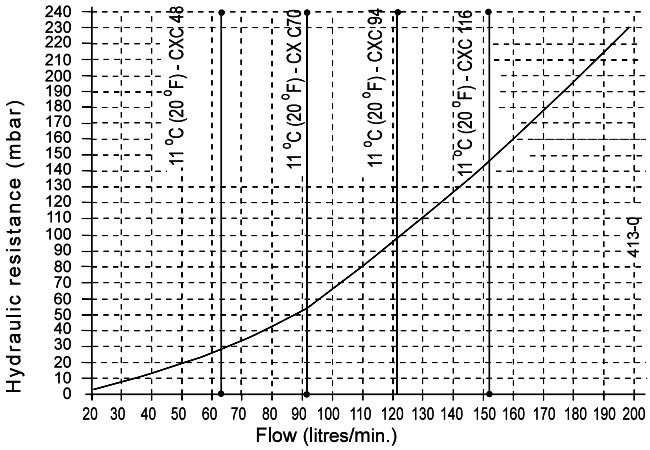


## 2 CLEARANCES & DIMENSIONS

**Table 4**

| Boiler Size | | CXC 48 | CXC 70 | CXC 94 | CXC 116 |
|---|---|---|---|---|---|
| Front clearance | mm (in) | 750 (29 1/2) | | | |
| Rear clearance | mm (in) | 200 (8) see text | | | |
| Side clearance | mm (in) | 50 (2) | 50 (2) | 50 (2) | 100 (4) |
| Dimension **A** | mm (in) | 723(28 1/2) | 846(33 5/16) | 969(38 1/8) | 1092(43) |

### POSITION OF BOILER

Minimum clearances required from walls or other fixed objects to allow for the free access of combustion air are shown in Table 4 above.

However, for maintenance purposes we suggest a minimum rear clearance of 200mm.

Any combustible material adjacent to the boiler and its flue system must be so placed or shielded as to ensure that its temperature does not exceed 65 °C (150 °F).

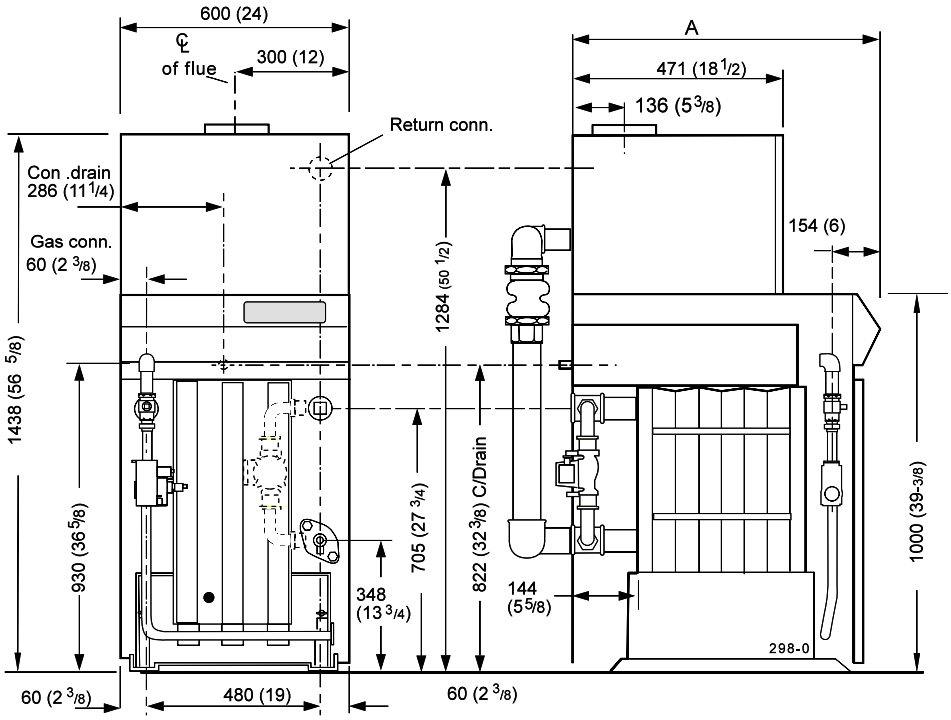


### MULTIPLE BOILER INSTALLATIONS

The minimum installation clearances must conform to the dimensions given below:

### CXC 48 & 70

Clearance between boilers = 50mm

Clearance at both ends of the multiple installation = 50mm*

### CXC 94 & 116

Clearance between boilers = 100mm

Clearance at both ends of the multiple installation = 100mm*

**Rear clearance:** sufficient clearance should be given at the rear of the boiler for connection of gas and water pipework.

*Additional clearance is required for access at either end of the installation.

and cost. Graph 1 is based on a 20°C temperature difference across the boiler.

## WATER CIRCULATION SYSTEM

Due to the compact nature of the boiler the heat stored within the castings at the point of shutdown of the burner must be dissipated into the water circuit in order to avoid the overheat thermostat tripping. In order to allow pump operation after burner shutdown the boiler control box incorporates a pump overrun facility which operates when the boiler switches off and until the flow temperature is below 75 $^0$C and, in order to make use of this, the pump must be wired to the appropriate terminal $L_2$ (pump) in the boiler control box.

1. The minimum flow rate as given in Table 5 must be maintained whenever the boiler is firing and during the pump overrun period.
2. During the period of pump overrun there must be an open circuit of adequate water volume and/or load. The minimum size of this circuit is given by the use of Graph 2.

   **Examples shown on Graph 2**

   **a.** For the **CXC 116** the minimum circuit during pump overrun could be a load of 6 kW with a volume of 31 litres or any other combination given by the relevant line.

   **b.** For the **CXC 94** the minimum circuit during pump overrun could be a load of 2 kW with a volume of 45 litres or any other combination given by the relevant line.

   The above circuit capacity during pump overrun may be achieved either by provision of an adequate bypass circuit or by ensuring that a zone of suitable size is open for circulation during this period by relevant control of zone valves or pumps.

   The wiring diagrams in Frames 16, 17 and 18 illustrate the control methods for achieving the above.

3. Pump selection should take account of the hydraulic resistance given in Graph 3.

## PUMP POSITIONS

Whenever practically possible the circulating pump(s) should be positioned so that it pressurises the system being served. The vertical distance between the pump(s) and any cold feed and expansion cistern MUST comply with the pump manufacturers requirements in order to avoid cavitation. These requirements override the information given in Frame 3 if the static head required for the pump(s) exceeds that required for the boiler.

**Table 5 - Flow rates for fully pumped systems**

| Boiler | Minimum flow rates for a temperature difference of 35 °C (63 °F) | |
|---|---|---|
| | l/s | g.p.m. |
| CXC 48 | 0.33 | 4.4 |
| CXC 70 | 0.48 | 5.3 |
| CXC 94 | 0.64 | 8.5 |
| CXC 116 | 0.79 | 10.4 |

## 3 OPEN VENTED SYSTEMS - Minimum static head requirements

Particular reference should be made to BS. 6644: Section 2; Subsection 10 and Guidance note PM5 "Automatically controlled steam and hot water boilers" published by the Health and Safety Executive.

The information and guidance given below is not intended to override any requirements of either of the above publications or the requirements of the local authority, gas or water undertakings.

Other British Standards applicable are BS.5422 and BS.6700.

The information provided is based on the following assumptions:

1. An independent open vent/safety pipe connection is made to the redundant boiler flow tapping or is positioned immediately after the system flow pipe connection to the header, as shown (C).
2. An independent cold feed/expansion pipe connection is made to the redundant boiler return tapping ("D"). Cold feed/expansion pipe connections made to the pumped system return will result in an increase in the static head requirement, caused by the additional resistance of the distributor tube. Surging may also increase.
3. The maximum flow rate through the boiler is based on a temperature difference of 11°C at full boiler output and the circulating pump is positioned in the flow to the system.
4. The boiler is at the highest point of circulation in the system. Systems designed to rise above the boiler flow tappings will automatically require a minimum static head higher than that shown.
5. The position of the open vent/safety pipe above the expansion cistern water level is given as a guide only ("B"). The final position will depend upon the particular characteristics of the system. Pumping over of water into the expansion cistern must be avoided.

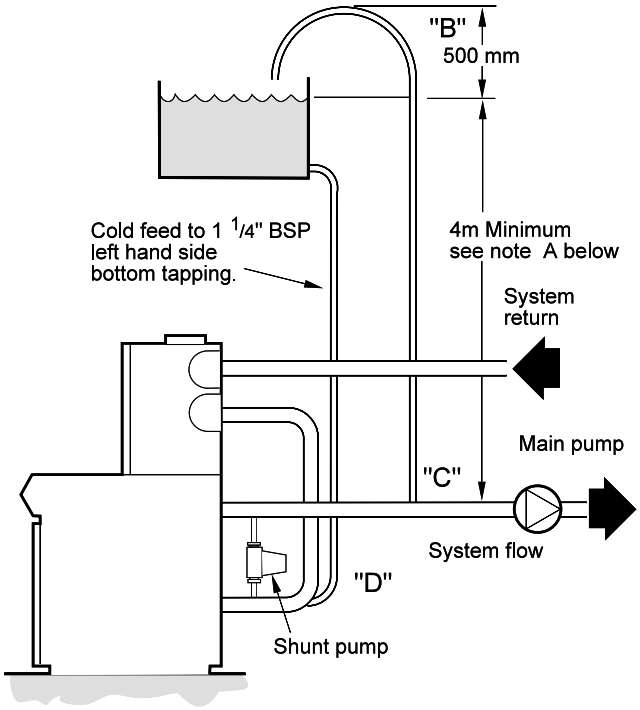


**Note A.**

*This minimum height must be increased, if necessary, to comply with the minimum head required by the pump manufacturer in order to avoid cavitation.*

**Note B.**

*This diagram does not show safety valves, water flow switches, etc., necessary for the safe operation of the system.*

### MINIMUM FLOW OF WATER - Refer to Table 5

The system design must provide for an adequate flow rate through the boiler at all times when the boiler is firing. The minimum flow rate should correspond to a temperature difference across the boiler flow and return of 35 $^0$C (63 $^0$F), assessed at catalogue rating.

It is essential that the main pump and shunt pump both overrun to dissipate the residual heat in the primary heat exchanger. This is done automatically if:

**a**. An unswitched live supply is connected to the boiler control box (for details see 'Electrical Connections').

**b.** The shunt pump (prewired) and main pump are connected to the boiler control box (for details see 'Electrical Connections').

**c.** Part of the system is available to the main pump when the call for heat by external controls is satisfied.

The boiler produces condensate when the system return water temperature falls below 55 °C (the Dew Point of the combustion products).

This condensate must be led away by a condensate drain connected to the steel pipe at the rear of the boiler and installed in accordance with IM22 (see 'Condensate Drain').

## WATER TREATMENT FOR HOT WATER AND HEATING BOILERS

There is a basic need to treat the water contained in all heating and indirect water systems, particularly open vented systems. It is assumed, incorrectly, that because boilers are operating in conjunction with what is apparently a closed circuit an open vented system will not, under normal circumstances, allow damage or loss of efficiency due to hardness salts and corrosion once the initial charge of water has been heated up a few times.

1mm of lime reduces the heat transfer from metal to water by 10%.

In practice the deposition of these salts is liable to cause noises from the boiler body or even premature boiler failure. Corrosion and the formation of black iron oxide sludge will ultimately result in premature radiator failure.

Open vented systems are not completely sealed from the atmosphere if proper venting and expansion of system water is to be achieved. The same tank is used to fill the system with water and it is through the cold feed pipe that system water expands into the tank when the boiler passes heat into the system. Conversely, when the system cools, water previously expelled is drawn back from the tank into the system, together with a quantity of dissolved oxygen.

Even if leakage from the heating and hot water system is eliminated there will be evaporation losses from the surface of the tank which, depending upon ambient temperature, may be high enough to evaporate a large portion of the system water capacity over a full heating season.

There will always be corrosion within a heating or hot water system to a greater or lesser degree, irrespective of water characteristics, unless the initial fill water from the mains is treated. Even the water in closed systems will promote corrosion unless treated.

**Aluminium Heat Exchanger**

The secondary heat exchanger of the Concord CXC is made of aluminium finned tube and so any water treatment must be suitable for systems containing aluminium.

**Under *no* circumstances should the boiler be fired *before the system has been thoroughly flushed.***

**Caradon Plumbing Limited** recommend only the use of Fernox or Betz Dearborn water treatment products, which must be used in accordance with the manufacturers instructions. For further information contact :-

Fernox Manufacturing. Co. Ltd, Tandem House, Marlowe Way, Croydon, Surrey CRO 4XS, Tel 0870 5601 5000 **or**

Betz Dearborn Ltd, Widnes, Cheshire, Tel. 0151 424 5351

**IMPORTANT: Any other treatment for this product will render the guarantee of Caradon Plumbing Limited INVALID.**

**Notes.**

1. If an inhibitor is used, and in hard water areas where treatment to prevent lime deposits is necessary, it is most important that the water treatment MUST be maintained at the correct concentrations recommended by the treatment manufacturer.

   Persons responsible for the continued operation of this boiler should be made aware of this requirement.

   If the boiler is installed in an existing system then any unsuitable water additives MUST be thoroughly drained.

## 4 SEALED (PRESSURISED) SYSTEMS

### Working pressure 4.5 bar maximum.

Particular reference should be made to BS. 6644: Section 2; Subsection 11 and Guidance note PM5 "Automatically controlled steam and hot water boilers" published by the Health and Safety Executive.

The information and guidance given below is not intended to override any requirements of either of the above publications or the requirements of the local authority, gas or water undertakings.

In general, commercial closed pressurised systems are provided with either manual or automatic water make up.

On both instances it will be necessary to fit automatic controls intended to protect the boiler, circulating system and ancillary equipment by shutting down the boiler plant if a potentially hazardous situation should arise.

Examples of such situations are low water level and operating pressure or excessive pressure within the system. Depending on circumstances, controls will need to be either manual or automatic reset. In the event of shut down both visual and audible alarms may be necessary.

Pressure vessels used must comply with BS. 4814 and must be sized on the basis of the total system volume and initial charge pressure.

Initial minimum charge pressure should not be less than 0.5 bar (7.2 psi) and must take account of static head and specification of the pressurising equipment. The maximum water temperatures permissible at the point of minimum pressure in the system is specified in Guidance Note PM5.

When make up water is not provided automatically it will be necessary to fit controls which shut down the plant in the event of the maximum system pressure approaching to within 0.35 bar (5 psi) of safety valve setting.

Other British Standards applicable to commercial sealed systems are:-
BS. 6880: Part 2.
BS. 1212
BS. 6281: Part 1
BS. 6282: Part 1
BS. 6283: Part 4

2. Artificially softened water must not be used in the system, under any circumstances.
3. In all systems the fitting of a filter to the return pipework, in order to prevent debris reaching the heat exchanger, is essential.

## INSTALLATION REQUIREMENTS

The appliance must be installed by a CORGI registered installer, identified by ❀. The installation of the boiler must be in accordance with the relevant requirements of the Gas Safety Regulations, current IEE (BS.7671) Regulations, Model Water Bye-laws, local water authority bye-laws and it should also comply with any relevant requirements of the local gas supplier, local authority and the relevant British Standard Codes of practice and building regulations.

**Limitations of Intended Operating Environment**

These appliances are **NOT** suitable for installation where they will be exposed to the elements.

A boiler room shall be constructed or adapted to meet the requirements of BS. 6644.

The maximum ambient temperature is 32° C at 1.5 metres from the floor, with a maximum humidity of 90% RH.

### FOR SMALL PIPE INSTALLATIONS:

BS. 6891: Installation of low pressure pipework

### FOR LARGE PIPE INSTALLATIONS:

**British Gas Publication:**

IM11: Flues for Commercial and Industrial Gas Fired Boilers and Air Heaters.

**Gas Installations**

IGE-UP-1: Purging Procedures of Non-domestic Gas Installations. Soundness Testing Procedures for Industrial and Commercial Gas Installations.

IGE-UP-2: Guidance notes on the Installation of Gas Pipework, Boosters and Compressors in Customer's Premises Equal to or Greater than 25mm (Non-domestic).

BS.6644: Installation of Gas Fired Hot Water Boilers 60kW to 2MW.

CP341: Water Supply.

CP342:2: Centralised Hot Water Supply.

Model Water Bye-laws.

Manufacturers notes must not be taken, in any way, as overriding statutory obligations.

The appliance must be installed in a room separated from living rooms and provided with appropriate ventilation direct to the outside - see Table 6.

**Table 6 - Ventilation Requirements**

| Total input rating of boilers | Position of air vents | Air vent areas (air direct from outside) |
|---|---|---|
| Upto 2 MW | HIGH LEVEL | 270 $cm^2$ plus 2.25 $cm^2$ per kW in excess of 60 kW total rated input |
| Upto 2 MW | LOW LEVEL | 540 $cm^2$ plus 4.5 $cm^2$ per kW in excess of 60 kW total rated input |

## FOUNDATION

The boiler must stand on a non-combustible floor (i.e. concrete or brick) which must be flat, level and of a suitable load bearing capacity to support the weight of the boiler (when filled with water) and any ancillary equipment.

If the boiler is mounted on a plinth then the dimensions must exceed the plan area of the boiler by at least 75mm on each side.

## VENTILATION

Safe, efficient and trouble-free operation of conventionally flued gas boilers is vitally dependent on the provision of an adequate supply of fresh air to the room in which the appliance is installed. Ventilation by grilles communicating directly with the outside air is required at both high and low levels. The minimum free areas of these grilles must be according to the scale in Table 6.

Position ventilation grilles to avoid the risk of accidental obstruction by blockage or flooding. If further guidance on ventilation is required then consult BS.6644.

## AIR SUPPLY BY MECHANICAL VENTILATION

The supply of air by mechanical means to a space housing the boiler should be by mechanical inlet with natural or mechanical extraction. Mechanical extract ventilation with natural inlet **must not** be used.

Where a mechanical inlet and a mechanical extract system is applied, the design ventilation flow rates should be as in Table 4 of BS.6644.

The requirements for air supply by mechanical ventilation are given in BS.6644.

**Note.** *For mechanical ventilation systems an automatic control should be provided to cause safety shutdown or lockout of the boiler(s) in the event of failure of air flow in either inlet or extract fans.*

**IMPORTANT.** The use of an extractor fan in the same room as the boiler (or in an adjacent, communicating room) can, in certain conditions, adversely affect the safe operation of the boiler. Where such a fan is already fitted (or if it is intended to fit an extractor fan after installation of the appliance) the advice of the gas supplier should be obtained.

## FLUE SYSTEM DESIGN

The **Concord CXC** condensing boiler is supplied with an integral fan which is fully matched to the boiler in each case to provide correct combustion air flow.

The power of this fan is such that there is a large reserve of pressure available to overcome a significant length of the flue without affecting the combustion performance of the boiler. The pressure available at the base of the flue to overcome flue resistance is 0.25 mbar (0.1 w.g.) This is sufficient to overcome the resistance of approximately 30 metres of 150mm diameter smooth, straight flue pipe.

**Material**

The type of flue pipe used should conform BS.715: Section 2 Stainless Steel or be of equivalent corrosion resistance. Advice regarding the availability of proprietary types of flue system can be obtained by contacting **Caradon Plumbing Ltd.** All joints or connections in the flue system must be impervious to condensate leakage and also any low points in the flue system should be drained using pipe of material resistant to condensate corrosion.

Care should also be taken in the selection of flue terminals as these tend to accentuate the formation of a plume.

Care should be taken to ensure the specification of the chimney is suitable for the application by reference to the manufacturers literature. **Caradon Plumbing Ltd** can offer advice on the design of suitable chimney systems.

## CONDENSATE DRAIN

The **Concord CXC** boiler will produce condensate whenever the temperature of the return water from the system is below approximately 55 °C (the Dew Point of the combustion products).

Natural gas condensate is mildly acidic with a pH value of about 4 and therefore corrosion resistant materials must be used in the construction of the condensate drain. Standard PVC pipe is suitable for this purpose and should be connected to the steel drain fitted on the boiler.

## GAS SUPPLY

If there is any doubt regarding the capacity of the gas meter, the available gas pressure, the adequacy of existing service pipes or the size required for new service pipes then the advice of the gas supplier should be requested. Installation pipework should be fitted and tested for gas soundness in accordance with BS. 6891 for small installations or IGE-UP-1 and IGE-UP-2 for large installations.

The local gas supplier must be consulted if it is necessary to employ a gas pressure booster.

## ELECTRICAL SUPPLY

***WARNING.*** This appliance must be efficiently earthed.

A 230 V ~ 50 Hz mains supply is required, fused at 5 amps.

Wiring external to the appliance MUST be in accordance with the I.E.E. (BS. 7671) Wiring Regulations and any local regulations which apply.

For details of connections see Frame 14.

## 5 CONCORD CXC BOILER ASSEMBLY - Exploded view

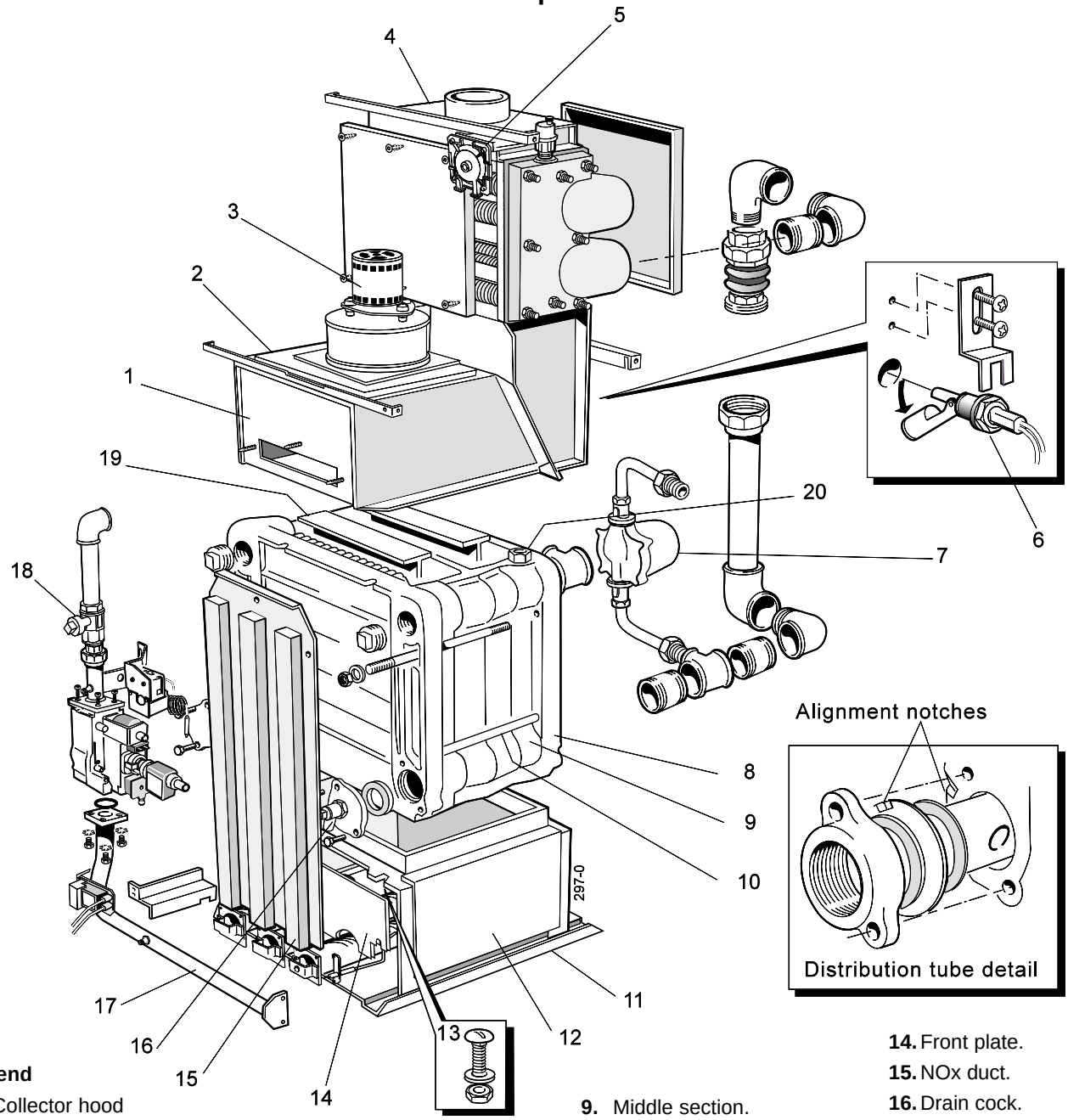


**Legend**

1. Collector hood
2. Cleanout cover
3. Fan
4. Secondary heat exchanger
5. Air pressure switch.
6. Float switch
7. Shunt pump.
8. End section.
9. Middle section.
10. Tie rods.
11. Base plate.
12. Combustion chamber.
13. Section bolt.
14. Front plate.
15. NOx duct.
16. Drain cock.
17. Burner manifold assy.
18. Gas cock.
19. Flueway baffles.
20. Thermostat pocket.

## 6 PACKAGING

The **Concord CXC** boiler is despatched from the factory fully assembled except for the casing, controls and installation packs which are packed separately within the same wooden crate as the boiler.

**CONTROLS PACK contains**

- Controls box complete ..... 1 off
- Controls installation pack ... 1 off

**INSTALLATION PACK contains**

- R2 sq. hd. plug ..... 3 off.
- R2 installation pipe ..... 2 off.
- Installation & Servicing Instructions .... 1 off.
- Users instructions ..... 1 off.
- System warning label ..... 2 off.

**JACKET PACK contains**

- Lower front panel ..... 1 off
- Upper front panel ..... 1 off.
- Lower LH side panel ..... 1 off.
- Lower RH side panel ..... 1 off.
- Upper LH side panel ..... 1 off.
- Upper RH side panel ..... 1 off.
- Lower top panel ..... 1 off.
- Upper top panel ..... 1 off.
- Infill panel ..... 1 off.
- Support bracket ..... 2 off.
- Flue brush ..... 1 off.
- Jacket hardware pack ..... 1 off.
- Lower rear panel ..... 1 off.
- Upper rear panel ..... 1 off.
- Upper middle rear panel ..... 1 off.
- Lower middle rear panel ..... 1 off.

## 7 PACKAGING AND BOILER REMOVAL

**1.** Remove the jacket carton and outer packaging frame.

**2.** Remove the jacket pack support frame.

**3.** Remove the controls package and installation pack.

**4.** Remove the 2" BSP steel handling bars from installation pack.

**5.** Remove 4 base bolts holding the assembly to the packaging base.

**6.** Remove the wood screws securing the front cross member on the packaging base.

**7.** Remove the gas cock by unscrewing the union and screw in the handling bars into the 2 front tappings. Protect the exposed inlet gas union from ingress of dirt.

**8.** Knock out front spacing blocks from the packaging base, ensuring that the boiler assembly is supported, using 2" BSP handling bars.

**9.** Using the handling bars, manoeuvre boiler forwards on the packaging base and slide over the collapsing base on to the floor.

**Note.**
*Before manoeuvring the boiler into its final position see Frame* 8.

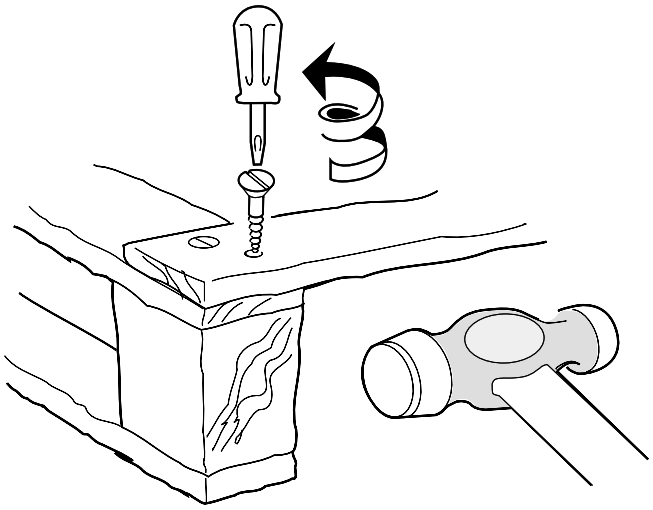

## 8 BOILER ASSEMBLY AND SYSTEM CONNECTIONS

**Manoeuvring the boiler**

1. Remove the gas cock to access the LHS tapping.
2. Screw the 2 handling bars (2" pipe supplied) into the 2 top tappings.
3. Screw in 2 bars (not supplied), 1 into the LH rear top tapping and the second into the tee at the RH top tapping.
4. Use these bars to manoeuvre the boiler into position.
5. Complete the system connections, using suitable jointing compound, as follows:

   **a.** The flow connection must be made to the upper tapping on the primary heat exchanger.

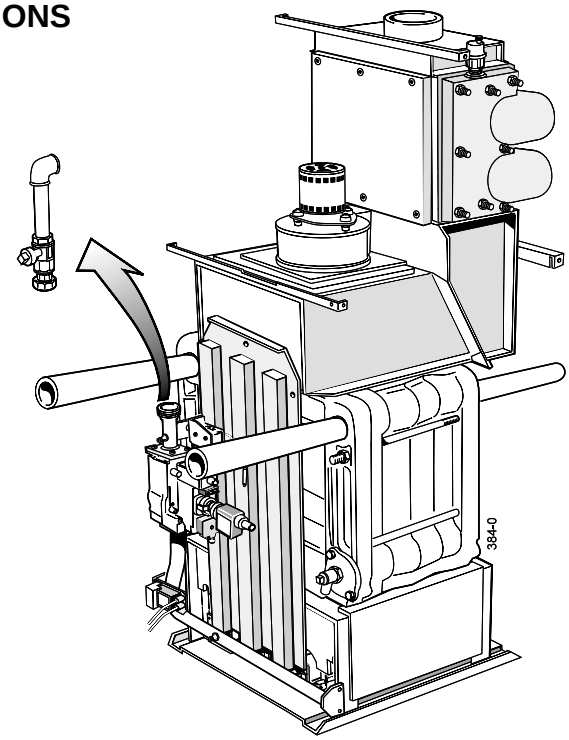


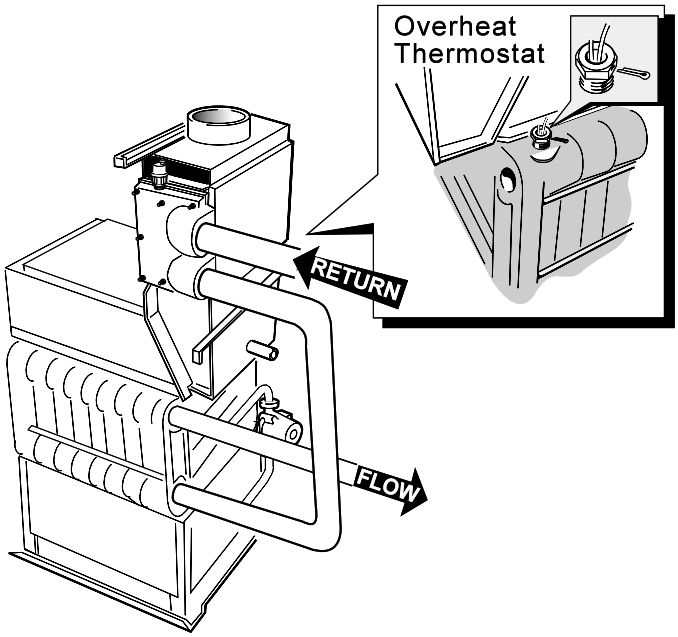


   **b.** The return connection must be made to the upper tapping on the secondary heat exchanger.

   **c.** Complete the water connections by plugging the 2 front top and 1 rear top tappings with the 2" BSP plugs provided. The remaining 1" lower tapping should be plugged if not used for cold feed on an open vent system or connection of a pressure vessel, if on a sealed system.

3. Position the overheat thermostat phial into the LH side thermostat pocket.

   The illustration shows the rear of the boiler with the flow and relative overheat thermostat position.

   Ensure that the overheat thermostat phial is correctly secured in the pocket. Refer to Frame 13.

## 9 CONDENSATE DRAIN CONNECTION

The condensate drain must be 1 1/4" diameter PVC pipe from the pre-fitted drain at the rear of the boiler.

The condensate drain may be led directly into the normal drainage system. The pipe should be installed with an adequate slope (e.g. 1 in 50) and consideration should be given to frost protection.

The drain should be in accordance with IM 22.

Connections to BS.5355 can be used directly, or connections to BS.5354 may be used with a suitable adaptor.

**Note**.
*A condensate trap is built into the boiler sump therefore an external trap is not necessary.*

## 10 FLUE CONNECTION

The 150mm (6") flue should conform to BS.715: Section 2 Stainless Steel or be of equivalent corrosion resistance.

The flue must be designed to have no greater resistance than that of 30m of straight, smooth 150mm (6") pipe.

All joints must be impervious to condensate leakage.

## 11 GAS CONNECTION

1. Refit the gas cock.
2. Connect the gas supply to the gas pipe elbow.
   The gas pipe should enter the boiler at the top LH side of the boiler.
3. Table 2 gives details of the inlet connection size and the minimum working pressures.

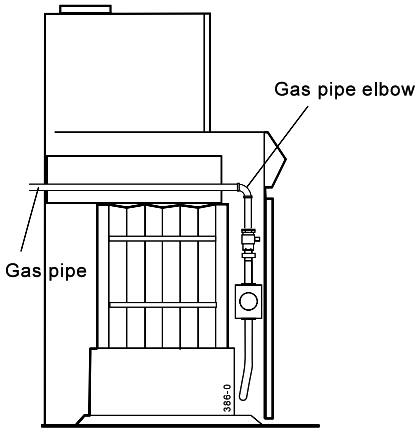


## 12 CASING ASSEMBLY

Unpack the control box from its carton and find the mains plug strapped to the back of the box.

The boiler casing should now be fitted.

The jacket hardware pack contains all the screws required for assembly.

1. Fit support angles to the collector hood and sump. The angle with the hole for the earth screw fits to the front. Ensure the rear support angle is fitted as shown.
2. Wire up the mains input cable to the plug provided. Run this cable along the lower clips (using the cable ties in the hardware pack) of the LH side panel with the plug placed at the front.

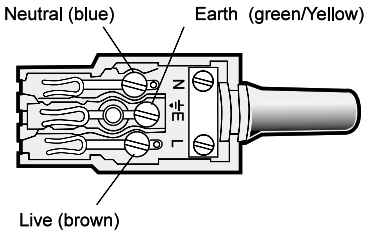


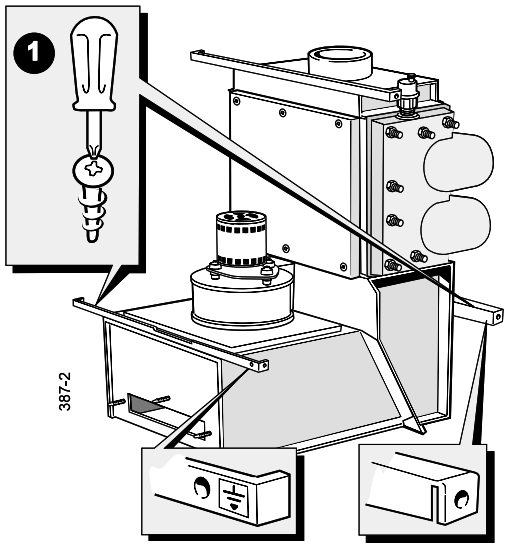


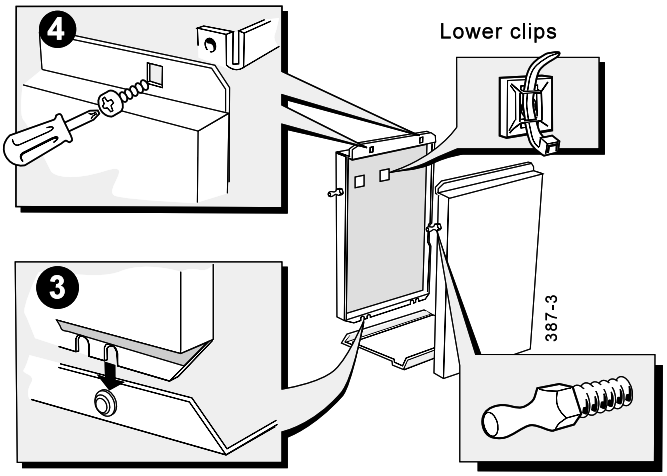


5. Fit clips to the top of each side panel.
6. Fit the spire clips to the side casing panels.
7. Hook on the control box to side panels.
8. Screw in self tapping screws at the bottom of the control box to fix it to the side panels.
   Push in the mains plug into the socket at the back of the control box.

3. Slide bottom of lower side panels on to studs on base tray.
4. Screw lower side panel to support angles.
   Repeat for other side.

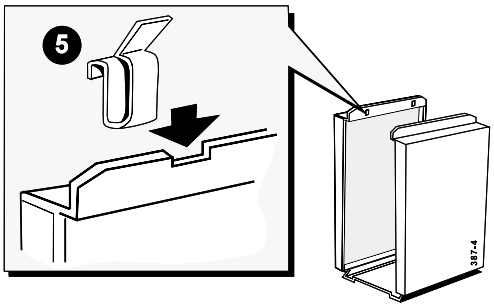


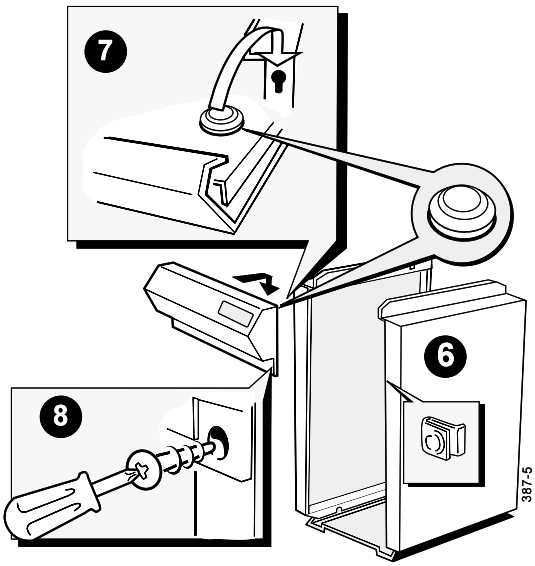

## 13 CASING ASSEMBLY - continued

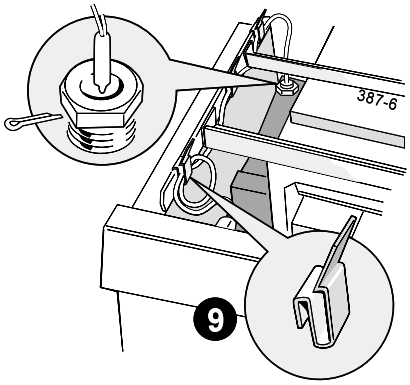


**9.** Route the overheat thermostat capillary through the cable clips as shown.
Ensure the phial is correctly seated in the correct pocket opposite side to the flow connection - refer to Frame 8.
Secure with the split pin provided.

**10.** Ensure that the Heyco bush is correctly located and that the top of the bush is at the marked line.
Route the cables from the temperature probe, air pressure switch and float switch through the clips on the RH side panel.
Neatly coil up any excess length of cable and push in the plug-in connector into the connection box.

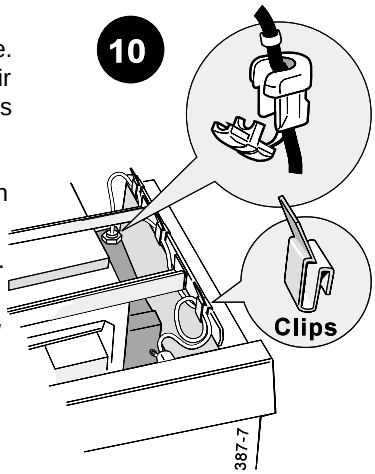


**11.** Hook the upper side panel into the keyhole slot.

**12.** Fix the upper side panel in position.
One screw into the lower side panel, one screw into the upper support angle.
Repeat for the other side.

**13.** Clip in the upper top panel.
Fit the infill panel around the flue and secure underneath top panel with the 2 self tapping screws provided.

**14.** Fit earth leads as shown.

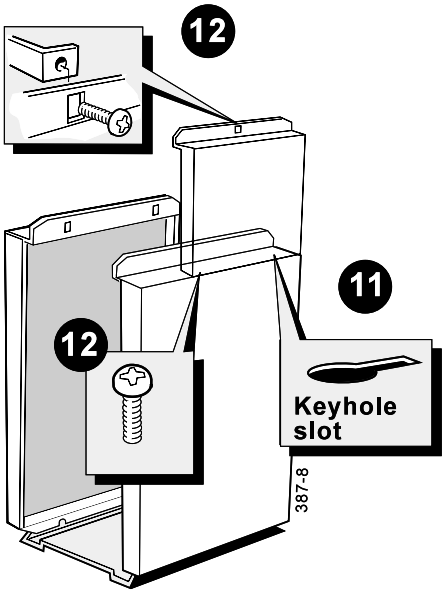


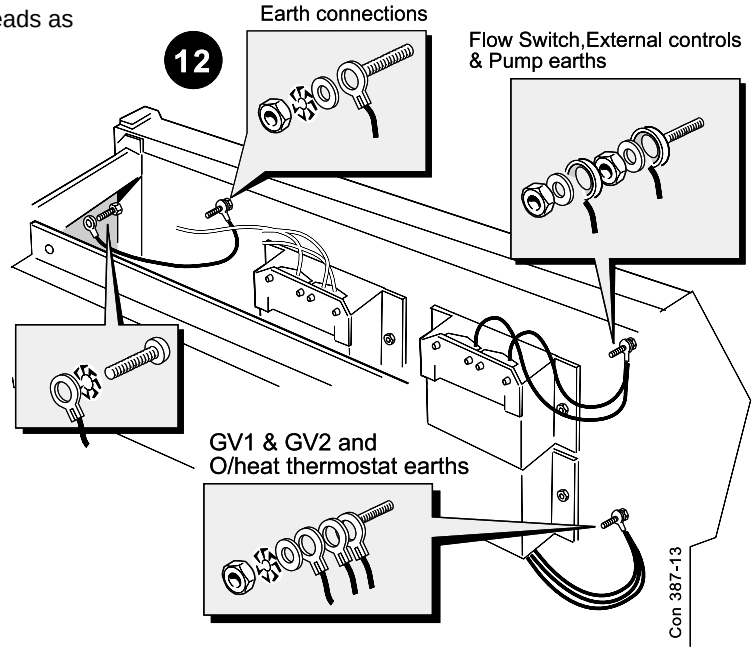


**Complete the following after reaching Frame 32**

**15.** Fit the lower top panel.
Fit the lower front panel.

**16.** The upper front panel has 2 hooks at the bottom.
Drop in these 2 hooks behind the back edge of the lower top panel, push home onto the 4 catches and secure with the top screw.

**17.** Fit rear panels in the sequence shown. Do NOT tighten the screws until all panels are fitted.
Fit No.1 panel with the top 2 screws only.
Fit No.2 panel with the bottom 2 screws only.
Fit No.3 panel with the 4 screws engaging panels 1 and 2.
Fit No.4 panel with the 4 screws.

Align all panels and tighten all screws.

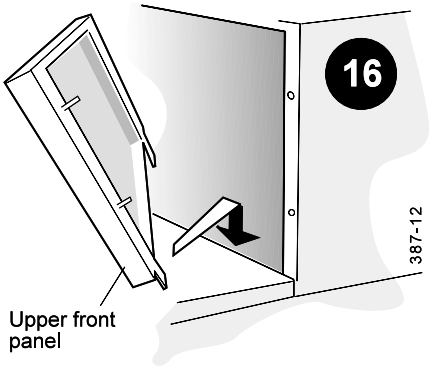


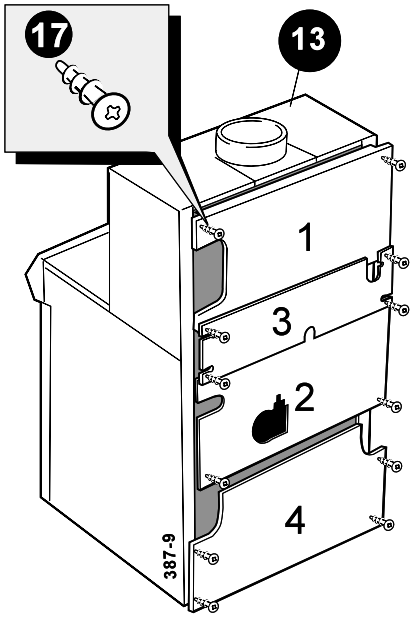

## 14 ELECTRICAL CONNECTIONS

***WARNING.***

This boiler must be efficiently earthed.

The internal wiring of the boiler control box is shown in Frame 15.

Connection must be made in a way that allows complete isolation of the electrical supply - such as a double pole switch, having a 3mm (1/8") contact separation in both poles, or a plug and socket serving only the boiler and system controls. The means of isolation must be accessible to the user after installation.

This should serve only the boiler, together with its controls and pumps. The supply must be wired direct to the boiler control box and must not be interrupted by any system controls. The pump(s) and any system controls must be wired back to the boiler control box.

The control box incorporates a pump overrun device which is necessary to dissipate residual heat after plant shutdown. It is essential that the main pump is wired to the pump terminals marked L2, N on the plug-in mains voltage connector shown below and in Frame 15.

**If no external controls are fitted it is essential that a link is wired in place of one on the "Fan/pump plug-in connector".**

The flow switch should be connected via volt-free contacts to the 'Flow S' terminals. A link may be fitted in place of the flow switch but the control will not be able to analyse the faulty flow switch, if such a failure should occur. Either of the above must be fitted or the boiler will not operate.

Any system controls should be connected, via volt free contacts, to the terminals marked 'EXT C'. **Do NOT connect an external clock to these contacts or any mains voltage.** If no external controls are fitted a link must be fitted across EXT C.

The boiler provides frost protection via the boiler sensor. If an external frost thermostat is required contact **Caradon Plumbing Limited.**

Wiring should be PVC insulated cable, not less than 0.75mm$^2$ (24/0.2mm). All fuses must be ASTA approved to BS. 1362.

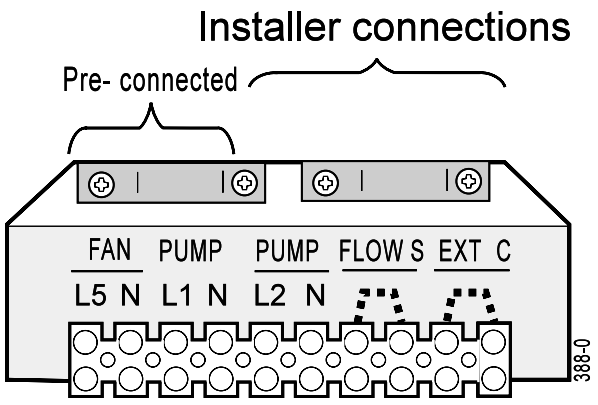


**Fan / Pump Plug-in connector**

The length of the conductors between the cord anchorage and the terminals must be such that the current conductors become taut before the earthing conductor, if the cable or cord slips out of the cord anchorage.

**BOILER CONNECTIONS**

**Ensure the boiler is ELECTRICALLY ISOLATED.**

The live supply cable should be fitted before assembly of the jacket - see Frame 12 for details.

All wiring between entry at the rear of the boiler and the connection box must be secured neatly under the cable clips provided.
Wiring must never be allowed to come into contact with any heated surfaces.

1. Check that the mains plug is pushed firmly into its socket.
2. Check that the temperature/float/air pressure plug-in connector is fitted into the RH connection box.
3. Carefully route the electrical leads from the gas valve/ spark generator behind the LH panel return and secure with the clip as shown.
   Fit this plug-in connector into the bottom connection box.
4. Route the fan and shunt pump cables through the clips at the top of the LH side panel.
5. Wire the main system pump (L2 & N), flow switch and external controls into the Fan/pump plug-in connector (see below). The earth wires should be looped back through the cable clamps and fixed to the earth post as shown in Frame 13.
   **The earth connections MUST NEVER be omitted.**
6. Fit the fan/pump plug-in connector into the mains voltage connection box behind the control box.

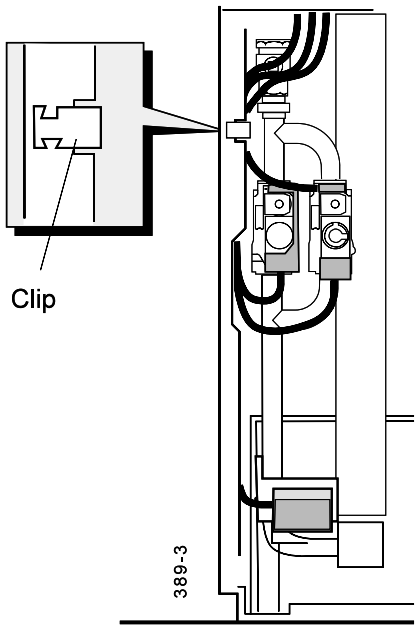

## 15 INTERNAL WIRING

**LEGEND**

| | | | | |
|---|---|---|---|---|
| **b** blue | **br** brown | **y** yellow | **y/g** yellow/green | **v** violet |
| **bk** black | **r** red | **w** white | **or** orange | **pk** pink |

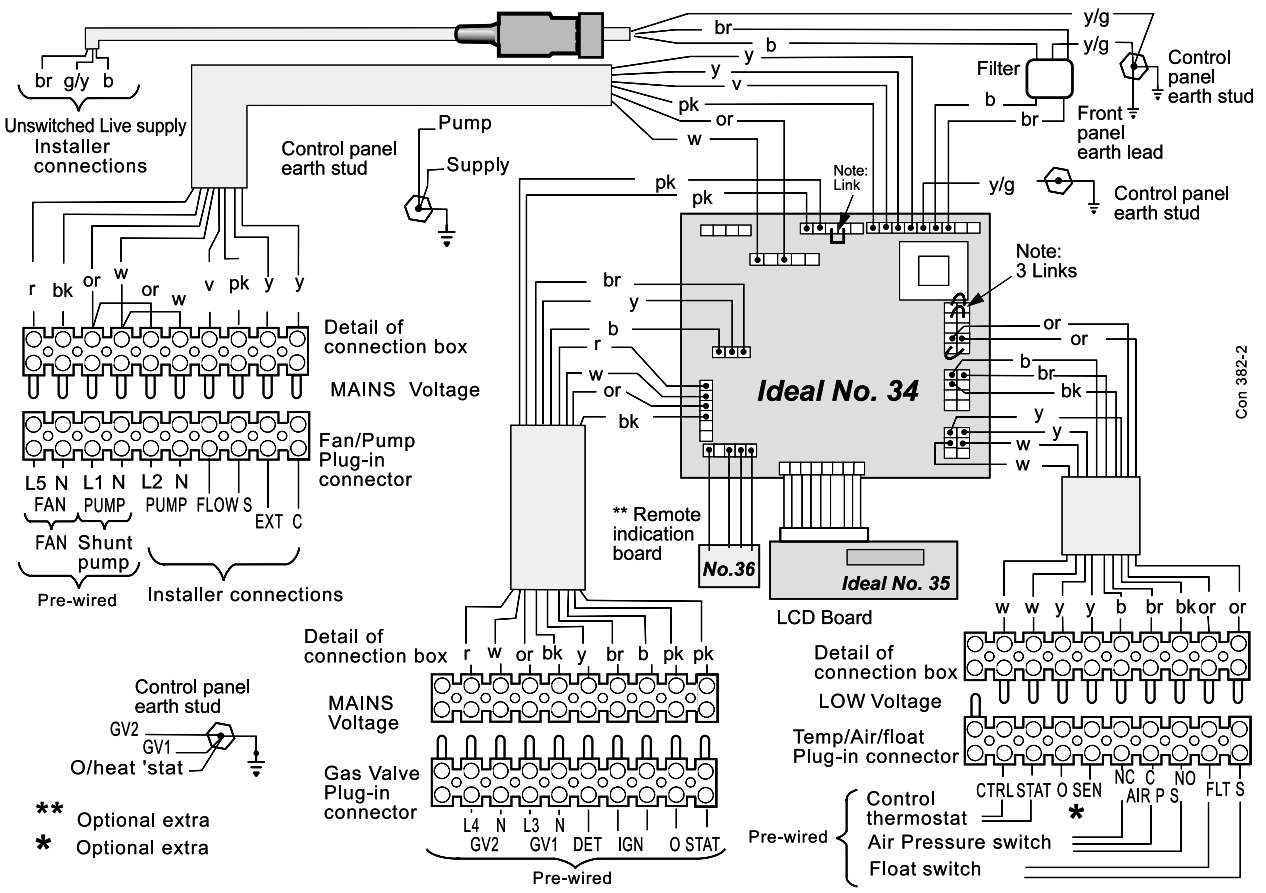


## 16 ZONES WITH BI-DIRECTIONAL MOTORISED VALVES

### IMPORTANT

Terminal L2 may control the appropriate pump(s) directly, provided that the total running or starting current does not exceed 6A (resistive or inductive): if this rating would be exceeded, then appropriate switchgear must be used to control the pumps indirectly.

Three zones are illustrated but the principles may be extended as required, provided the above conditions are met. Each relay will then require as many contacts as there are zones.

**Overrun**

Since any zone may be the load during overrun, all zones MUST individually be able to satisfy the conditions in the foregoing paragraph. If not all zones can do this, then consider other means of control detailed on other sheets.

**Normal operation**

When any thermostat is satisfied while others are calling for heat, power is available via relay contacts to close the valve for that zone. When all thermostats are satisfied (also when the clock period ends) all relays will be off so the zone valves which were open will remain open for the pump overrun period.

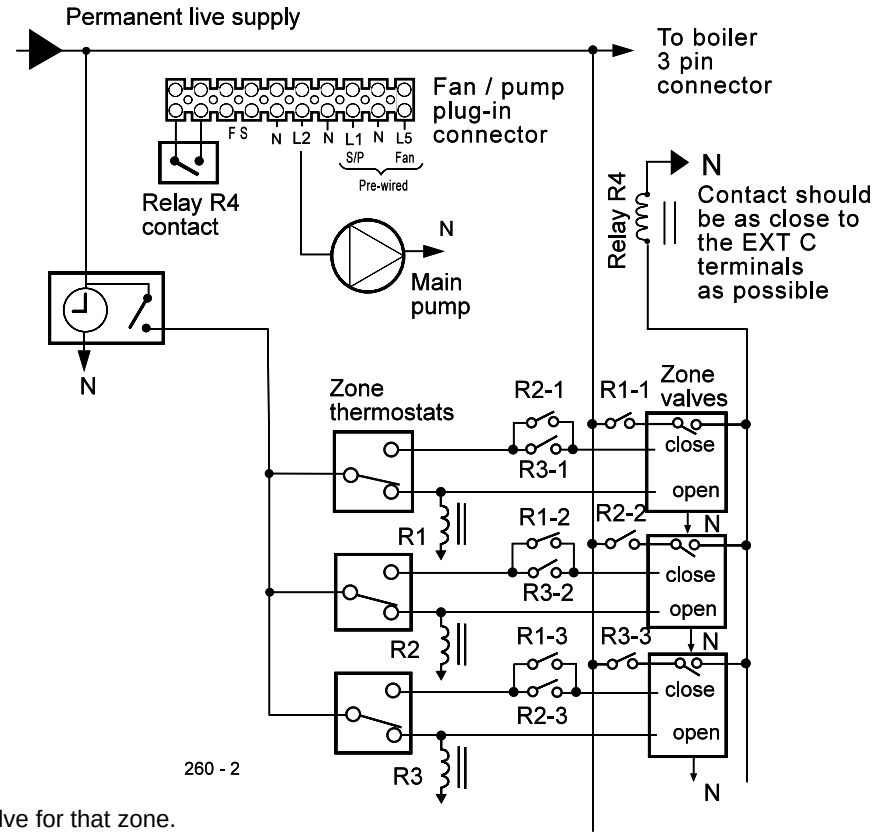


At the start of the next call for heat (or the next clock period) valves on the zones not calling for heat will motor-shut.

**Water circulation system - refer to page 7**

## 17 ZONES WITH INDIVIDUALLY PUMPED ZONES (3 zones shown)

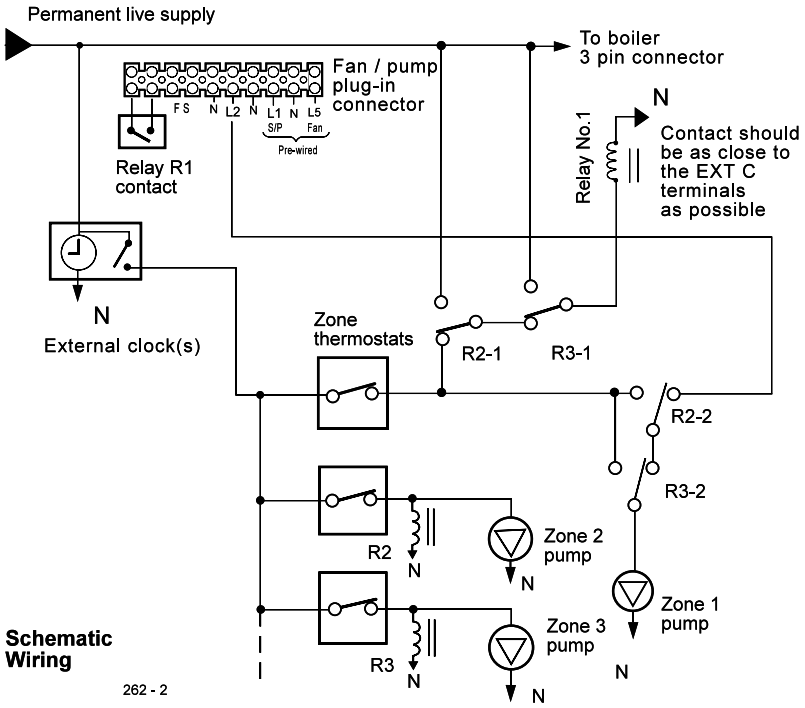


**IMPORTANT**

Terminal L2 may control the appropriate pump(s) directly, provided that the total running or starting current does not exceed 6A (resistive or inductive): if this rating would be exceeded then appropriate switchgear must be used to control the pumps indirectly.

Three zones are illustrated but the principles may be extended as required, provided the above conditions are met. For each zone (except Zone 1) a relay with 2 C/O contacts is required.

**Overrun**
During overrun periods, Zone 1 pump performs the overrun facility; this zone, therefore, must satisfy the conditions in the foregoing paragraphs and Graph 2.

**Normal operation**
During a call for heat on Zone 1 only, Zone 1 thermostat energises the boiler, which in turn energises Zone 1 pump from terminal L2.

During a call for heat on other zones, the appropriate relay directs power to L1 to energise the boiler, at the same time ensuring that Zone 1 pump is controlled by Zone 1 thermostat.

**Water circulation system - refer to page 7**

## 18 ZONES WITH SPRING-RETURN MOTORISED VALVES

**IMPORTANT**

Terminal L2 may control the appropriate pump(s) directly, provided that the total running or starting current does not exceed 6A (resistive or inductive): if this rating would be exceeded then appropriate switchgear must be used to control the pumps indirectly.

Three zones are illustrated but the principles may be extended as required, provided the above conditions are met. Only one relay is required, irrespective of the number of zones.

**Overrun**
During overrun and dormant periods, Zone Valve 1 is held open. This zone, therefore, MUST satisfy the conditions in the foregoing paragraphs and Graph 2.

**Normal operation**
During a call for heat on Zone 1 only, the boiler is energised via Zone 1 thermostat and the normally closed contacts of the relay.

During a call for heat on other zone(s), the relay will be energised by the auxiliary switch on the zone valves. This provides power to energise the boiler. If, in addition, Zone 1 now calls for heat, its thermostat will open Zone 1 valve via the normally open contacts of the relay.

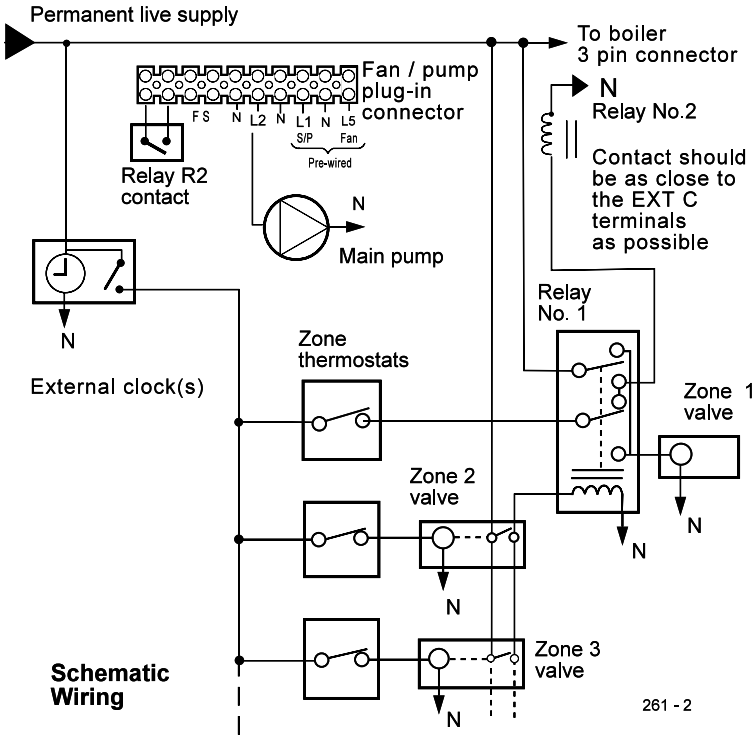


When the clock period ends, Zone valve 1 will (stay) open via normally closed relay contacts to achieve pump overrun.

**Water circulation system - refer to page 7**

## 19 COMMISSIONING AND TESTING

### GENERAL

Check that all drain cocks are closed, that any stop valves fitted to the flow and return pipes are open and that the system has been filled and properly vented. Ensure that the caps on both secondary heat exchanger automatic air vents are open.

Check that the shunt pump is set to maximum and that both isolation valves are open.

### PURGING

Check that the electricity supply is switched OFF.

Remove the jacket lower front panel.

Extinguish all naked lights and open all doors and windows.

DO NOT SMOKE. Check that the gas supply is turned ON at the meter and open the main gas inlet cock. Loosen the union and allow air to be purged from the gas line until gas is smelled. Refer to BS 6891 or IGE-UP-1 for further details. Retighten the union.

### TESTING FOR GAS SOUNDNESS

Close the gas supply cock at the meter.

Remove the screw in the inlet pressure test point (Frames 23/24) and connect a gas pressure gauge to the test point. Take particular care to ensure a gastight connection. Open the gas supply cock at the meter and the appliance gas cock; record the static pressure. Next, close the gas supply cock at the meter. Wait for 1 minute for temperature stabilisation then observe the pressure gauge over a period of 2 minutes.

Any leaks must be cured.

Replace all pressure test point screws.

## 20 INITIAL LIGHTING

The **Concord CXC** incorporates an advanced microprocessor based control system which operates all electrical functions of the boiler including automatic ignition, flame detection, thermostatic control, and high/low burner operation. In addition, the microprocessor also has onboard commissioning and servicing instructions and a fault diagnosis programme.

The next section describes the minimum procedure to light and commission the boiler. Full operating instructions for the microprocessor control and details of the high/low operation system are included in Frames 27-30.

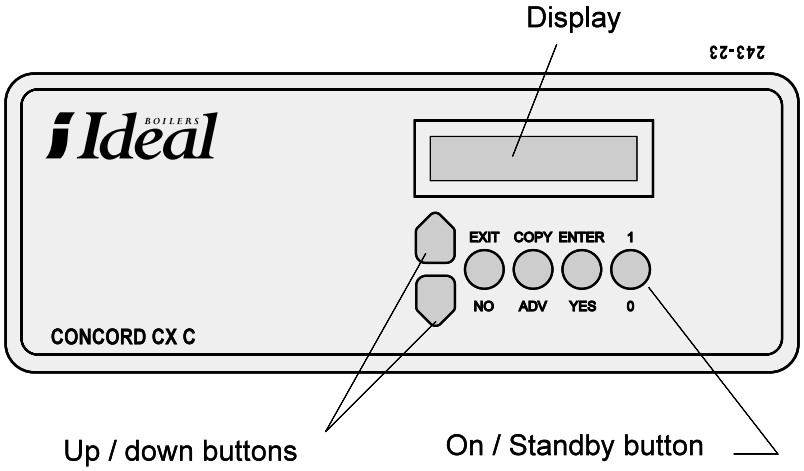


## 21 LIGHTING INSTRUCTIONS

1. Check that the gas and electricity supplies to the boiler are turned off.
2. Connect a gas pressure gauge to the inlet pressure test point. (Frame 23 or 24).
3. Turn on the gas and electricity supplies. The display will initially show a start-up code followed by;

| STANDBY 0 |
|---|

4. Press the [1/0] button The display will change to:

| BOILER ON 1 |
|---|

then change every few seconds to indicate the boiler status. The boiler will commence its ignition sequence.

5. The fan will start and the boiler should light, initially at low rate, for a maximum period of 3 minutes, if less than 55°C, before proceeding to maximum rate. If the boiler fails to light, allow the controls to cycle until ignition is established. If the boiler fails to light after 5 attempts, the display will show "Detection Fault". In this case, the ignition sequence should be reset by pressing the [COPY] button. Check that the gas inlet pressure is at least the minimum value stated in Table 2 when the boiler is firing at maximum rate (High).
6. Whilst the boiler is warming up, observe the display to become familiar with its operation. The display changes automatically between the:

- Boiler status and flow temperature
- Hours run
- Temp set
- Programmer status
- Enter for menu
- Day
- Date and time

**Note.** *As the boiler flow temperature approaches the thermostat setting, the boiler is automatically reduced to low rate.*
*This feature is designed to improve overall operating efficiency and reduce short cycling under low load conditions. The controls will automatically switch the boiler between high and low upon demand.*

## 22 CHECKING THE MANIFOLD PRESSURES

Turn the boiler OFF by pressing the [0/1] button and allow the flow temperature to cool to less than 50°C.

Connect a pressure gauge to the burner manifold test point (Frame 23 or 24). Press the [0/1] button again to turn the boiler ON.

The boiler will operate at low rate for approximately 3 minutes before proceeding to high rate (this will only happen if the flow temperature is below 55 $^{0}$C otherwise the boiler will proceed immediately to high rate).

Observe the burner pressures and compare them to the values given in Table 1. If either pressure differs by more than 10%, reset the pressures by following the procedure in Frame 23 or 24.



## 23 ADJUSTING THE MANIFOLD PRESSURES

**CXC 48 & 70 ONLY**

1. Press the [ENTER] button on the fascia panel, then press either the [UP] or [DOWN] arrow button until the display shows:

   COMMISSIONING

   then press [ENTER]. The microprocessor is now in commissioning mode. Failure to enter the Commissioning mode will result in a fault condition being detected when the following actions are carried out.

2. If desired, it is possible to use the onboard commissioning instructions, using the [UP] / [DOWN] arrow buttons. However the following paragraphs provide more detailed instructions and are recommended until the installer is familiar with the **Concord CXC**.

3. It is essential to adjust the maximum setting first.

4. Adjust the system controls to ensure that the boiler will operate at high rate for a reasonable period, then remove the dust cover and adjust the high rate burner pressure setting, using a suitable spanner. Turn the maximum adjuster (7) clockwise to increase, or anticlockwise to decrease, the pressure. After setting to the indicated pressure allow the boiler to operate for about 5 minutes to stabilise then recheck the burner pressure.

5. Press the [0/1] button to turn the appliance off, then disconnect the high/low solenoid connector plug (10) from the gas valve. Turn the appliance on and repeat the above sequence but using the low rate adjustment screw (6) inside the spindle.

6. Turn the appliance off, reconnect the high/low solenoid plug, refit the dust cover over the adjustment screws and refit both pressure test point screws. Check for gas soundness.

7. Press [EXIT] to leave the commissioning mode and return to the main menu.

8. Press [EXIT] again to return to the status displays.

**LEGEND**

1. Fascia panel display.
2. Overheat thermostat reset button.
3. Main gas inlet cock.
4. Union.
5. Gas control valve.
6. Screw - minimum adjuster.
7. Gas rate adjuster - maximum.
8. Burner setting pressure test point.
9. Inlet pressure test point.
10. High/low solenoid connector.

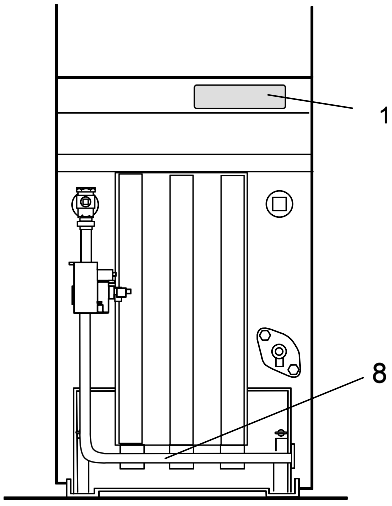


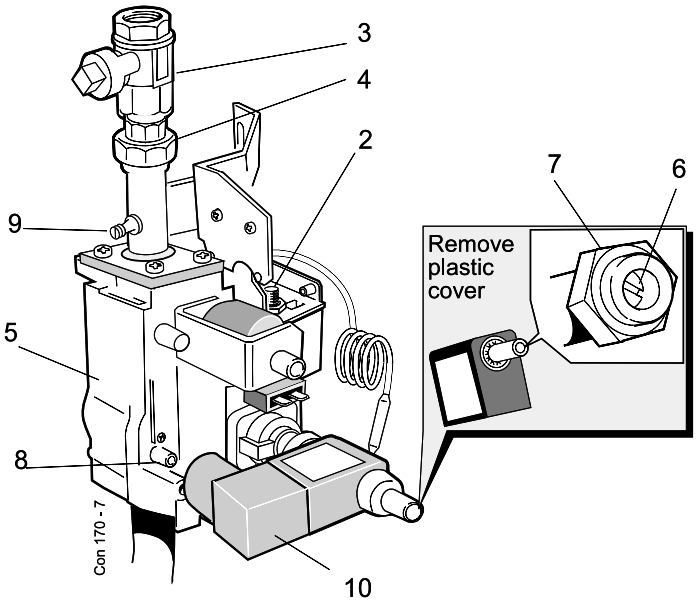

## 24 ADJUSTING THE MANIFOLD PRESSURES

### CXC 94 & 116 ONLY

1. Press the [ENTER] button on the fascia panel, then press either the up or down arrow button until the display shows:

COMMISSIONING

then press [ENTER]. The microprocessor is now in commissioning mode. Failure to enter the commissioning mode will result in a fault condition being detected when the following actions are carried out.

2. If desired, it is possible to use the onboard commissioning instructions using the up/down arrow buttons. However the following paragraphs provide more detailed instructions and are recommended until the installer is familiar with the **Concord CXC**.

3. It is ESSENTIAL to adjust the LOW setting first.

4. Press the [0/1] button to turn the appliance OFF, then disconnect the power leads from the right hand (HIGH) gas valve.

5. Press the [0/1] button again to light the burner. Allow the burner to run at low rate for several minutes then check that the low burner pressure is as shown in Table 1 for the appropriate boiler size. If necessary, adjust the low burner pressure adjusting screw (7).

6. Press the [0/1] button to turn the boiler off, reconnect the power leads to the RH valve and press the [0/1] button again to relight the boiler. Adjust the system controls to allow the boiler to fire at high rate for several minutes, then remove the dust cover and adjust the high burner pressure adjusting screw (8). After setting to the indicated pressure replace the dust cover and allow the boiler to operate for about 5 minutes to stabilise then recheck the burner pressure.
**Note.** *If high rate pressure is not achievable as above check that the gas restrictor in the low-rate valve is fitted (see Frames 39 & 42).*

7. Press the [0/1] button to turn the boiler off, then refit both pressure test point screws. Check for gas soundness.

8. Press [EXIT] to leave the commissioning mode and return to the main menu.

9. Press [EXIT] again to return to the status displays.

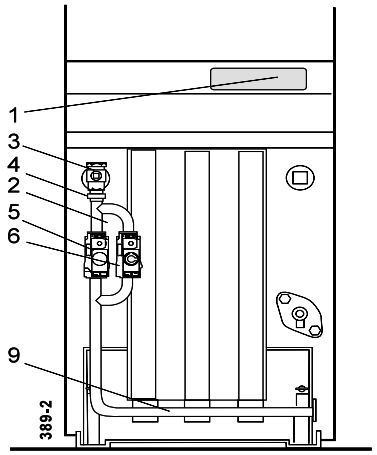


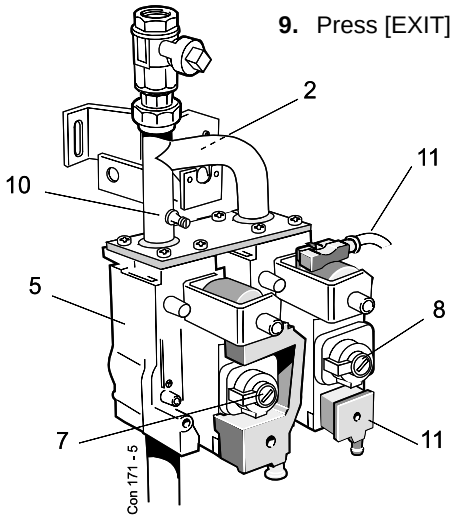


**LEGEND**

1. Fascia panel display.
2. Overheat thermostat reset button.
3. Main gas inlet cock.
4. Union.
5. Gas control valve low rate.
6. Gas control valve high rate.
7. Low rate adjusting screw.
8. High rate adjusting screw.
9. Burner setting pressure test point.
10. Inlet pressure test point.
11. RH (high) gas valve power connector.

## 25 OPERATING INSTRUCTIONS

The **Concord CXC** features direct burner ignition, high/low burner operation, and a microprocessor control system.

Upon a demand for heat, the controls start the fan, the air pressure switch senses flow then the controls open the low rate gas valve and provides a rapid spark at the ignition electrode for up to 10 seconds.

The burner will light and remain at low rate for approximately 3 minutes before proceeding to high rate (when the microprocessor opens the remaining gas valve).

If the boiler fails to light, the gas valve is closed and there will be a delay of 1 minute before the cycle is repeated. If, after 5 attempts, the burner has failed to light, the boiler will go to lockout and

DETECTION FAULT

will be displayed on the screen.

When the boiler flow temperature reaches the thermostat set point, the controls will turn the burner to low rate. If the flow temperature continues to rise, the burner and fan will be turned off at 3 °C above the set point.

If, however, the temperature falls below the set point whilst on low fire, the controls will automatically turn the burner back up to maximum rate.

This system has the advantages of ensuring that the boiler accurately maintains the set temperature (without the large temperature swings that can be associated with on/off boilers), prevents rapid or short cycling, and provides more efficient system operation.

## 26 ADDITIONAL FEATURES OF THE CONTROL SYSTEM

In addition to the operational characteristics described above, the control system incorporates the following features accessible to the user or service engineer:

### ADJUSTABLE BOILER TEMPERATURE CONTROL

This is factory pre-set at 82 $^{0}$C but may be adjusted by the user between 60 $^{0}$C and 85 $^{0}$C. Refer to Frame 30.

### PROGRAMMER TIMER

A maximum of 3 time periods per day can be programmed in to the boiler.

**Note**. *This is a boiler timer only and does not replace a conventional system programmer serving more than one heating zone.*

### OUTSIDE SENSOR (optional extra)

If the optional outside sensor is fitted, the control system will recognise this and automatically regulate the boiler flow temperature with respect to changes in the external temperature. If the sensor is fitted, an extra status information screen will appear stating whether the device has been activated or not (i.e. compensator on/off).

### COMMISSIONING INSTRUCTIONS

These are provided to assist the installer to commission the boiler.

### SERVICING INSTRUCTIONS

These are provided to assist the service engineer.

### FAULT DIAGNOSIS

In the unlikely event of a fault condition, the microprocessors will identify the fault area and display a suitable message on the display.

Further to these accessible features, there are other features present in the system which the installer/service engineer should be aware of.

### HOURS RUN LOG

This feature enables the installer to determine the workload of the boiler.

### PUMP OVERRUN

If the flow temperature is above 75 $^{o}$C at the time of boiler shutdown, the controls will maintain pump operation until the residual heat within the appliance has been dispersed and the flow temp is below 75 $^{o}$C.

### ANTI-CYCLE DEVICE

On any heating system, if the heating load is very low, there is a tendency for the boiler to cycle on and off rapidly. This is inefficient and can lead to shortened boiler life. The high/low operating system of the **Concord CXC** minimises the risk of this but, in addition, the controls prevent the boiler from short cycling by preventing subsequent ignition within a period of 2 minutes. When active, the display will show:

ANTICYCLE (flow temp)

## 27 DESCRIPTION AND OPERATION OF BOILER CONTROLS

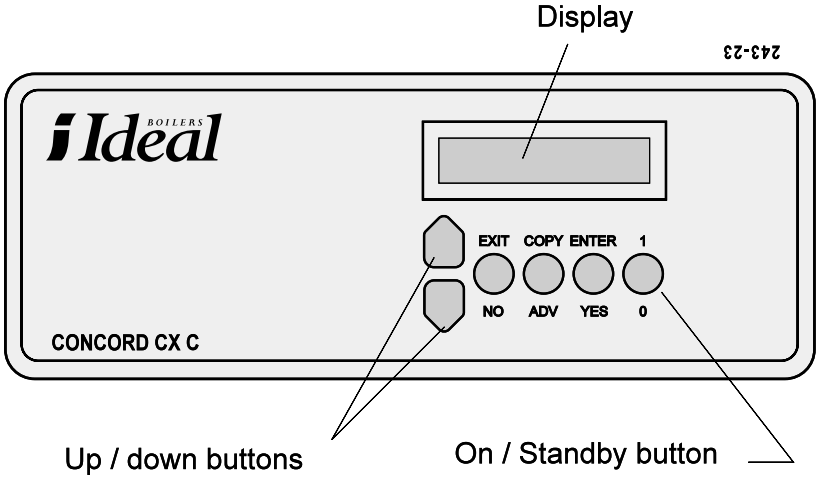


### ON / STANDBY [1/0] BUTTON

Turns the boiler ON and to STANDBY.

***WARNING***.
*STANDBY does **NOT** electrically isolate the boiler.*

When this switch is in the STANDBY position the display will show :-

STANDBY 0

On initial start up the boiler will indicate the hardware and software code, the boiler type and indicate if the boiler is ON or STANDBY. If the boiler is at STANDBY the rotating information screens will not be in evidence.

To switch the boiler on press the On/Standby [1/0] button. The display will show :-

BOILER ON 1

This display will be retained for 5 seconds before the information screens are displayed.

### INFORMATION SCREENS

If the optional outside temperature kit, enabling weather compensation, has been fitted the display will indicate the compensated set point temperature.

An example of the display is as follows :-

**MONDAY**
**14 : 10 19 / 09 / 95**
**ON HIGH 50 °C**
**HOURS RUN 250**
**TEMP SET 82 °C**
**PROGRAMMER ON**
**"ENTER" FOR MENU**

## 28 DESCRIPTION AND OPERATION OF BOILER CONTROLS - continued

The diagram below shows the sequence of steps to be taken when reading the instructions on the following pages.

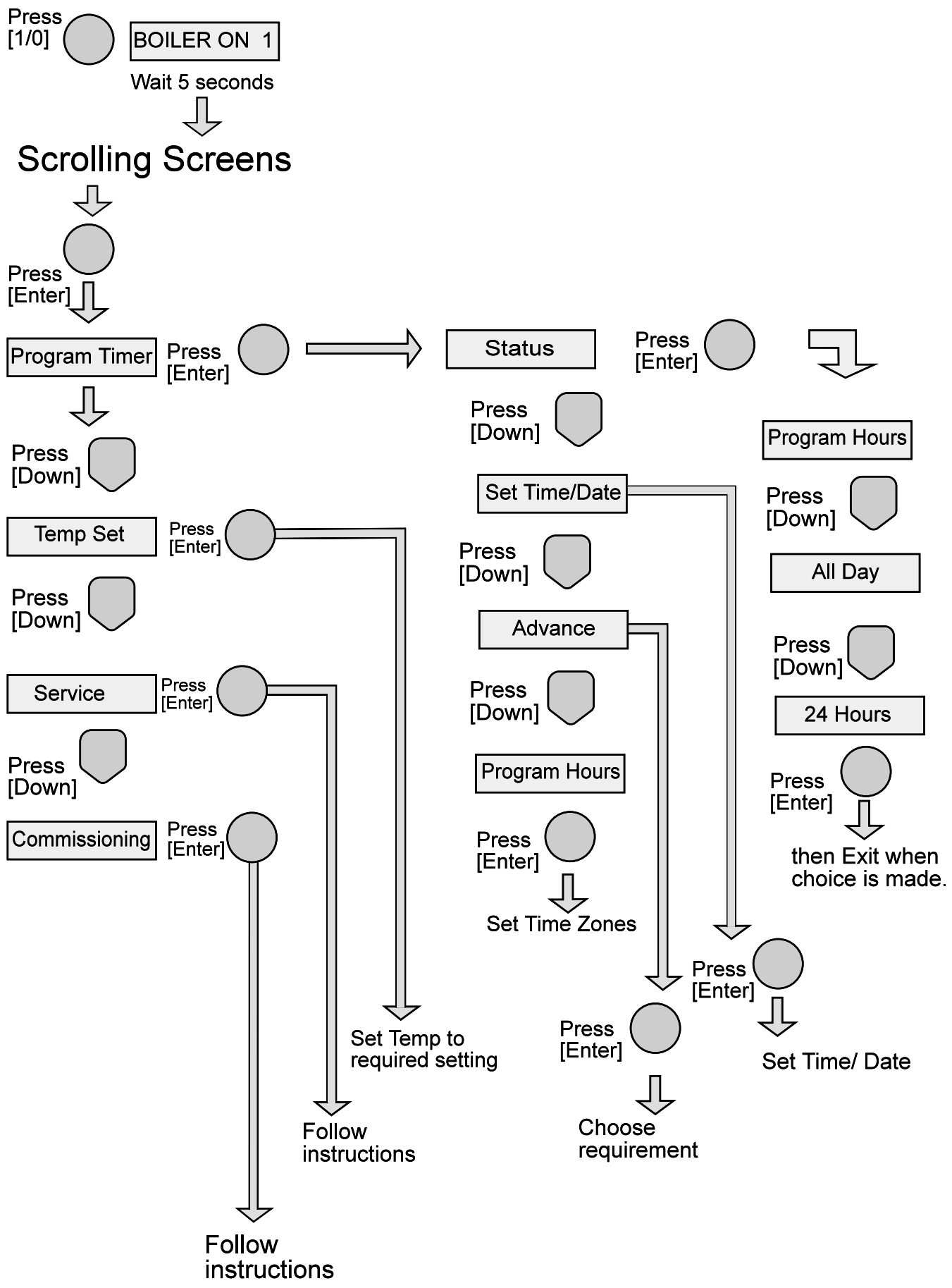

## 29 DESCRIPTION AND OPERATION OF BOILER CONTROLS - continued



### MENU

To access the menu screen ensure that the information screens are being displayed.
Any key, except the [1/0] button, may now be pressed to access this feature but, as indicated on the information screen, the [ENTER] button is the preferred means.

On entering this option the first screen displayed will be:-

PROGRAM TIMER

The [DOWN] button can be pressed consecutively to access the features required, which are as follows:-

TEMP SET

SERVICE

COMMISSIONING

If the weather compensation option is fitted then a further screen will be displayed after commissioning.

The [UP] button will access the above options in reverse. When the option required is displayed and the [ENTER] button pressed another set of menus will be available as discussed on the following pages.

### PROGRAMMER TIMER

The programmer has 3 time zones per day for each day of the week. Each day can be programmed for the requirements of that day, giving 7 programmed days or, using the copy facility, any number of days can be the same. If a particular time zone is not required then the ON and OFF periods should be programmed for the same time.

Each button has an auto repeat function.

The programmer is based on a 24 hour clock and the boiler comes with a backup programme set for :-

**All Day**

The boiler will respond to this programme unless an alternative is programmed in.

Using the [UP] or [DOWN] button select the "Programmer Timer" from the menu and press [ENTER]. The following menus will be available using the [UP] or [DOWN] buttons:-

STATUS

**or** SET TIME/DATE

**or** ADVANCE

**or** PROGRAM HOURS

To select any of the above use the [UP] or [DOWN] button until the option required is displayed and press [ENTER].

### STATUS

Enables the selection of programme hours, all day usage or 24 hour.

If the "Programme Hours" option is selected the boiler will go on and off, subject to the times programmed.

If ALL DAY usage is selected the boiler will come on at the first "ON" period selected and off on the last "OFF" period selected, ignoring all other time settings. Based on the above backup programme this means the boiler would run, subject to any other external controls, from 07:30 to 22:00 hours.

If 24 HOUR is selected the programme times will be ignored and the boiler will run subject to the external controls until one of the other options is again selected.

#### SET TIME/DATE

Enables the correct time and date to be entered.

The display will show a flashing day of the week as follows :-

TUESDAY

The correct day can be selected by use of the [UP] or [Down] button and, when correct, the [ENTER] button should be pressed. The time and date will now be displayed as follows:-

10 :57 20/09/95

with first two digits, the hours, flashing.

By use of the [UP] or [DOWN] button the correct hour is selected and the [ENTER] button pressed. The minutes will now be flashing and, by use of the [UP] or [DOWN] button, the correct minutes selected and the [ENTER] button pressed.

This method is repeated until the correct day, month and year are selected. On selecting the correct year and pressing [ENTER] the hours will flash. Then, if all the data is correct, the [EXIT] button should be pressed for the control to accept this information.

### ADVANCE

Enables the programme to be advanced by one hour.

The following display will be available:-

ADVANCE 1HR Y/N?

If the [YES] button is pressed and the programmer is in an OFF period the boiler will be brought on for one hour, subject to external controls. If the boiler is on with less than one hour to a programmed off period then the difference between this time and one hour is the time of the extended on period. If the boiler is in the 24 hour mode then this option will have no effect.

## 30 DESCRIPTION AND OPERATION OF BOILER CONTROLS - continued

If the Advance has been selected, then to cancel it the same procedure should be followed but the [NO] button pressed.

PROGRAMME HOURS

Enables a user- timed programme to be entered.

The following display will be available:-

MON 1 ON 06 : 30

with the hours, 06, flashing

Using the [UP] or [DOWN] button select the correct hour and press [ENTER]. The *minutes* will now flash and the correct minutes should be selected, using the [UP] or [DOWN] button followed by pressing [ENTER]. This will cause the hours to flash and if the correct ON time has been entered the [EXIT] button should be pressed. The display will now show the OFF for time zone one.

This procedure should be repeated for all 3 time zones for Monday.

After the last [EXIT] the display will ask if this day's programmes require to be copied to Tuesday. If the [YES] button is pressed Tuesday's programme will be the same as Monday. This action can be repeated for all the days or as many as required,

If the [NO] button is pressed then all 3 time slots will need to be programmed with the required times.

**TEMPERATURE SET POINT**

Enables the temperature at which the boiler is required to operate to be set. It has a range of 60 °C - 85 °C.

Using the [UP] or [DOWN] button select the "Temp set" from the menu and press [ENTER]. The following will be displayed:-

TEMP SET 82

with the temperature flashing

The [UP] and [DOWN] button should be pressed until the correct temperature is selected and then the [ENTER] button should be pressed and the temperature selected will become stationary. Pressing the [EXIT] button will ensure that the control accepts the new setting and return to the menu.

**High / Low Operation**

In the example above, when the boiler flow temperature is equal to 82 °C the high rate gas valve will close, allowing the boiler to run at low rate. When the flow temperature exceeds the set temperature by 3 °C, in the example above 85 °C, the low rate gas valve will close and the boiler will be off. The information screen will display

STANDBY.....85. C

The boiler will remain OFF for a minimum of 3 minutes or until the boiler flow temperature has dropped by 3 °C, whichever is the greater time.

If the boiler load is such that it cycles between high and low operation the boiler will fall through 3° before the high rate gas valve is energised.

**Delayed High Rate Gas valve Operation**

When the boiler is started from cold the high rate gas valve will be delayed for thirty seconds and then energised. If the boiler flow temperature is equal to or greater than 55 °C then this delay will NOT occur.

**Notes.**

1. *If a fault occurs with the boiler thermostat the fault display screen will show "C/H Sensor Fault".*
2. *When the low rate gas valve is de-energised as the temperature required has been obtained the boiler will go into an anticycle route for 2 minutes. The display will indicate anticycle and the current flow temperature.*

## SERVICING

The SERVICE option is intended as a memory aid to the more comprehensive servicing instructions to be found in this manual.

Using the [UP] or [DOWN] button select "Service" from the menu and press [ENTER]. The following display will be available:-

REFER TO SERVICE

GUIDE ON DOOR

The 2 screens will alternate to display this whole message.

When using this option, arrow keys will be in evidence to indicate if the [UP] or [DOWN] buttons should be used.

It is IMPORTANT that these instructions are carried out precisely and in the order displayed.

**COMMISSIONING**

The "Commissioning" option is intended as a memory aid to the more comprehensive commissioning instructions to be found in this manual.

Using the [UP] or [Down] button select "Commissioning" from the menu and press [ENTER]. The following display will be available:-

REFER TO SERVICE

GUIDE ON DOOR

The 2 screens will alternate to display this whole message.

When using this option arrow keys will be in evidence to indicate if the [UP] or [DOWN] buttons should be used.

It is IMPORTANT that these instructions are carried out precisely and in the order displayed.

**FAULT DIAGNOSIS**

In the unlikely event of a fault condition, the microprocessors will identify the fault area and display a message indicating the nature of the fault to assist a speedy and effective repair.

See "Fault Finding" section for more details.

## 31 COMBUSTION SYSTEM SOUNDNESS CHECKS

Remove the upper front casing panel. Check that there is no leakage of combustion products around the fan, secondary heat exchanger and flue connection, using a smoke match or smouldering taper.

If any leaks are evident, immediate steps must be taken to rectify them.

## 32 TESTING

Check that the main burner responds correctly to manual on/off operations of any controls fitted in the gas control circuit. Check, in the following manner, the operation of the flame failure safety device.

1. Extinguish the main burner by turning off the main gas inlet cock. Refer to Frames 23 and 24.
2. Check that the display shows "Detection Lockout".
3. Turn on the gas cock and reset by pressing [COPY].
4. Complete the casing assembly. Refer to Frame 13.
5. **Important Commissioning / Operating Instructions:**
   *Do not operate this appliance for long periods or take any combustion readings with the casing or any part of the casing removed.*

## 33 ADJUSTMENT OF WATER FLOW RATE THROUGH THE BOILER

When commissioning the heating/ domestic hot water system the shunt pump must be adjusted to give the minimum flow rate given in Table 5, when that part of the system intended to be used for dissipation of residual heat only is in operation.

## 34 HANDING OVER

### ROUTINE OPERATION

Full instructions covering routine lighting and operation of the boiler are given on the Lighting and Operation Instruction Label located on the inside of the casing door.

Draw the attention of the boiler owner or his representative to the Lighting and Operating Instruction Label on the inside of the casing door. Give a practical demonstration of the lighting and shutting down of the boiler.

Describe the function of the boiler and system controls and show how they are adjusted and used.

Hand over these and the User's Instructions to the customer and request him to keep them in a safe place for ready reference.

**IMPORTANT.** Point out to the owner that the boiler must have regular maintenance and cleaning, at least annually, in order to ensure reliable and efficient operation. Regular attention will also prolong the life of the boiler and should preferably be performed at the end of the heating season.

Recommend that a contract for this work should be made with a CORGI registered installer.

## 35 SERVICING

**Caradon Plumbing Limited** do not accept any liability resulting from the use of unauthorised parts or the repair and servicing of appliances not carried out in accordance with the Company's recommendations and specifications.

A comprehensive service should be carried out at least once a year. The User is advised to make a contract with a CORGI registered engineer.

***WARNING.***
ALWAYS turn *OFF* the gas supply at the gas cock and switch *OFF* and disconnect the electricity supply to the appliance **BEFORE servicing or replacing any components.**

### CLEANING THE BOILER

Pull and lift off the lower front panel.

Remove the screw from the top of upper front panel. Pull the panel forward and lift the bottom hooks clear of the lower top panel.

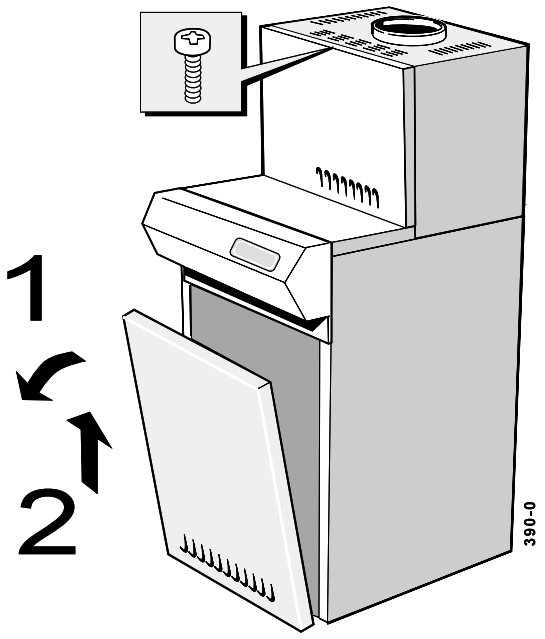

## 36 SERVICING - continued

Remove lower top panel from the boiler casing.

Unscrew the extended nuts at the top of the NOx duct behind the control box and lift the NOx duct clear of the burners as illustrated below.

Undo the wing nuts securing the burner front plate. Pull the front plate forwards, at the top, and lift it out - taking care not to damage the insulation or the detection electrode.

On the **CXC 48 & 70** remove the screws holding the HT heat shield from the LH leg of the combustion chamber. Raise slightly and withdraw the heat shield, taking care not damage the leads.

The burners may be lifted out after they have been pushed back to clear the injector. Take care not to

damage the ignition electrode assembly and carefully detach the ignition leads when removing the left hand burner. Take care not to damage the detection electrode when removing the RH burner.

Hinge cleanout cover insulation upwards and to the left. Remove front access cover (secondary heat exchanger) insulation by releasing from the retention tabs.

Unscrew the 5 screws securing the fan assembly and remove the pressure sensing pipe. Unclip the capacitor, disconnect the inline connector and remove the earth lead. Remove the assembly by pivoting it anticlockwise.

Remove the fan plate, inspect the fan impeller and clean if necessary.

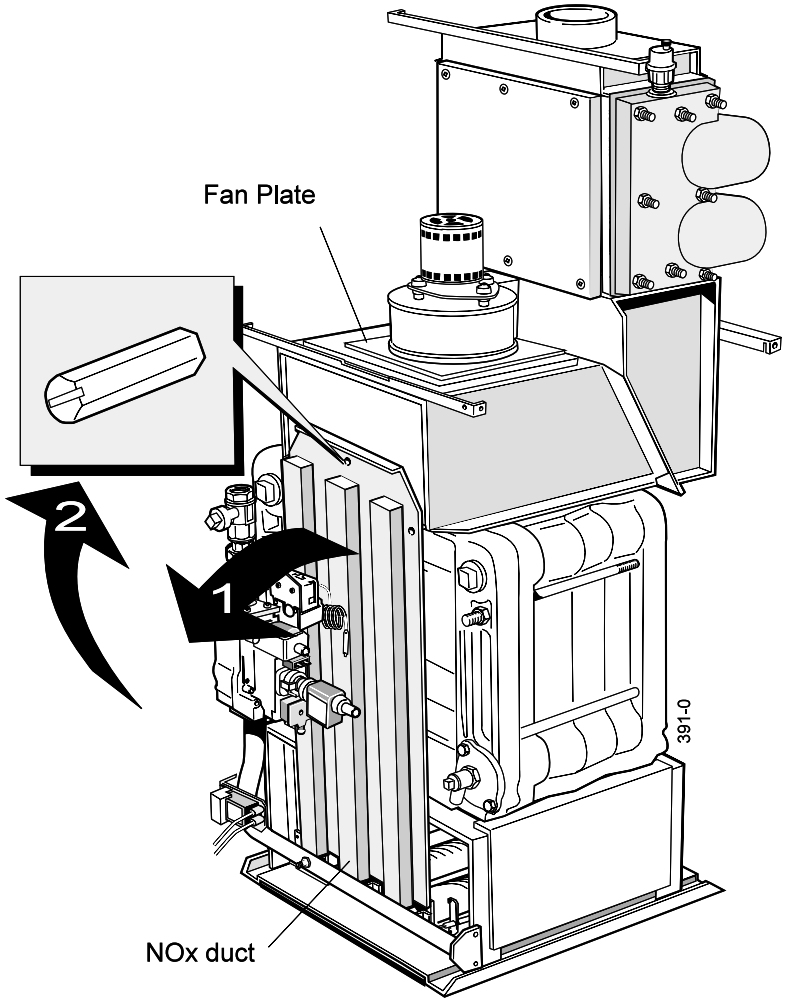


**Concord CXC 48/70**
Undo the screws securing the cleanout cover and lift it off to give access to the flue ways. Lift out the flue baffles.

**Concord CXC 94/116**
Undo the screws securing the clean out cover and lift it off.
Remove the 2 screws securing the distribution plate. Lift the front edge of the baffle and pull forward to clear the joggle at the rear.
Lift the RH edge up into the corner until the LH edge drops below the supporting angle - see diagram.
The baffle can now be removed and access to the flue ways obtained.

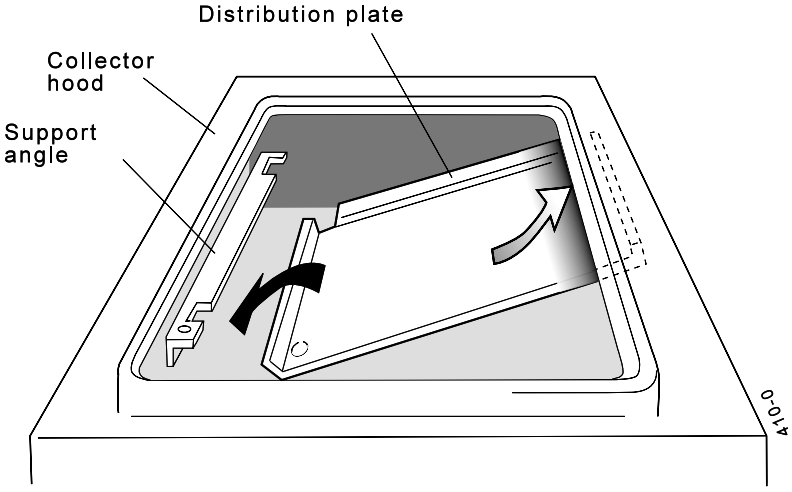


Lift out the flue baffles.

**All boilers**
Remove all loose deposits from the primary heat exchanger, especially from between the fins (using the brush provided) and remove all debris from the combustion chamber floor.

Examine the burner assembly. Clean the burner bars by brushing them down with a stiff bristle (not wire) brush. Check each bar carefully to ensure that all flame ports are clear, that there are no cracks and that all surfaces are free from accumulated deposits.

If available, an industrial vacuum cleaner may be useful to assist in this work. When cleaning the burner bars, take care to avoid damage from rough handling to the ignition or detection electrodes.

Inspect the ignition and detection electrodes.

Ensure that they are clean and in good condition.
In particular, check that:

1. The ignition electrode shield and base fixing screws are tight.

2. The electrodes are correctly positioned - see Frames 40 or 41.

## 37 SERVICING - continued

Remove the secondary heat exchanger front plate (6 screws) then slide out the secondary heat exchanger baffles. Clean the fins with the brush provided and remove all debris.

Reassemble in reverse order.

**CXC 94/116 only.** Refit the distribution plate.

The secondary heat exchanger baffles (one to each bank of tubes) must be fitted with their returns uppermost. Before refitting the secondary heat exchanger front plate and fan assembly check that the seals are intact. Replace if necessary.

Do not refit the insulation and casing panels until a leakage test has been carried out after recommissioning the boiler.

**TESTING AFTER SERVICING**

After re-assembly restore the electricity and gas supplies. Light the boiler (refer to the Lighting Instructions) and test for leaks. Refer to Frame 19 'Testing for Gas Soundness'.

Check burner manifold pressures (Frame 22) and adjust if necessary (Frames 23 or 24). Finally reset any external controls to the desired position.

Check that there is no leakage of combustion products around the fan, secondary heat exchanger and flue connection, using a smoke match or smouldering taper.

If any leaks are evident, immediate steps must be taken to rectify them.

## 38 REPLACEMENT OF COMPONENTS - Refer to Frames 5, 40, 41 and 42

### GENERAL

***WARNING.*** ALWAYS turn *OFF* the gas supply at the gas inlet cock and switch *OFF* and *DISCONNECT* the electricity supply before working on the appliance.

To facilitate the replacement of components, remove and replace the casing top and front panels, fan, NOx duct and the burner front plate as necessary - described under 'Servicing'.

## 39 GAS CONTROL VALVE

1. Disconnect the electrical connections to the faulty gas valve.
2. Check that the gas inlet cock is OFF, unscrew the 4 screws on the gas valve inlet flange, the 4 screws on the outlet flange and remove the valve.
3. If the valve has a brass restrictor fitted to its outlet, remove by unscrewing and refit into the new valve. **It is imperative that the gas restrictor is fitted to the low-rate valve.**
4. Replace the gas control valve and re-assemble in reverse order, ensuring that the arrow indicating the direction of flow is in the correct position.
5. Ensure that new 'O' ring seals are correctly placed in each flange connection.
6. Test for gas soundness.
7. Recommission the appliance and set the manifold pressures as described in Frames 22 and 23 or 24.

## 40 MAIN BURNER

1. Remove the NOx duct and burner front plate, as previously described in Frame 35.
2. On the **CXC 48 and 70** remove the screws holding the HT heat shield from the LH leg of the combustion chamber. Raise slightly and withdraw the heat shield, taking care not damage the leads.
3. Each burner can be removed by sliding back, to clear the injector, and then lifting out. Disconnect the ignition leads from the LH burner and the detection lead from the RH burner.
4. Remove the 2 screws securing the electrode assembly and heat shield to the LH burner bracket and the 2 screws securing the detection electrode bracket to the RH burner.
5. Reassemble in reverse order.

**IMPORTANT.** Care must be taken to prevent damage to the combustion chamber insulation when replacing burners.

## 41 BURNER AND CONTROLS ASSEMBLY - Exploded View - CXC 48 & 70

**LEGEND**

**1.** Main gas inlet cock.
**2.** Gas inlet union.
**3.** Gas control valve.
**4.** 'O' ring seal.
**5.** Spark generator.
**6.** Burner manifold.
**7.** Main injector, 3 off.
**8.** Main burner (centre/RH), 2 off.
**9.** Main burner (LH), 1 off.
**10.** Ignition electrodes.
**11.** Overheat thermostat generator mounting bracket.
**12.** Overheat thermostat.
**13.** Detection electrode assembly.
**14.** HT leads heat shield
**PTP** Pressure test point .

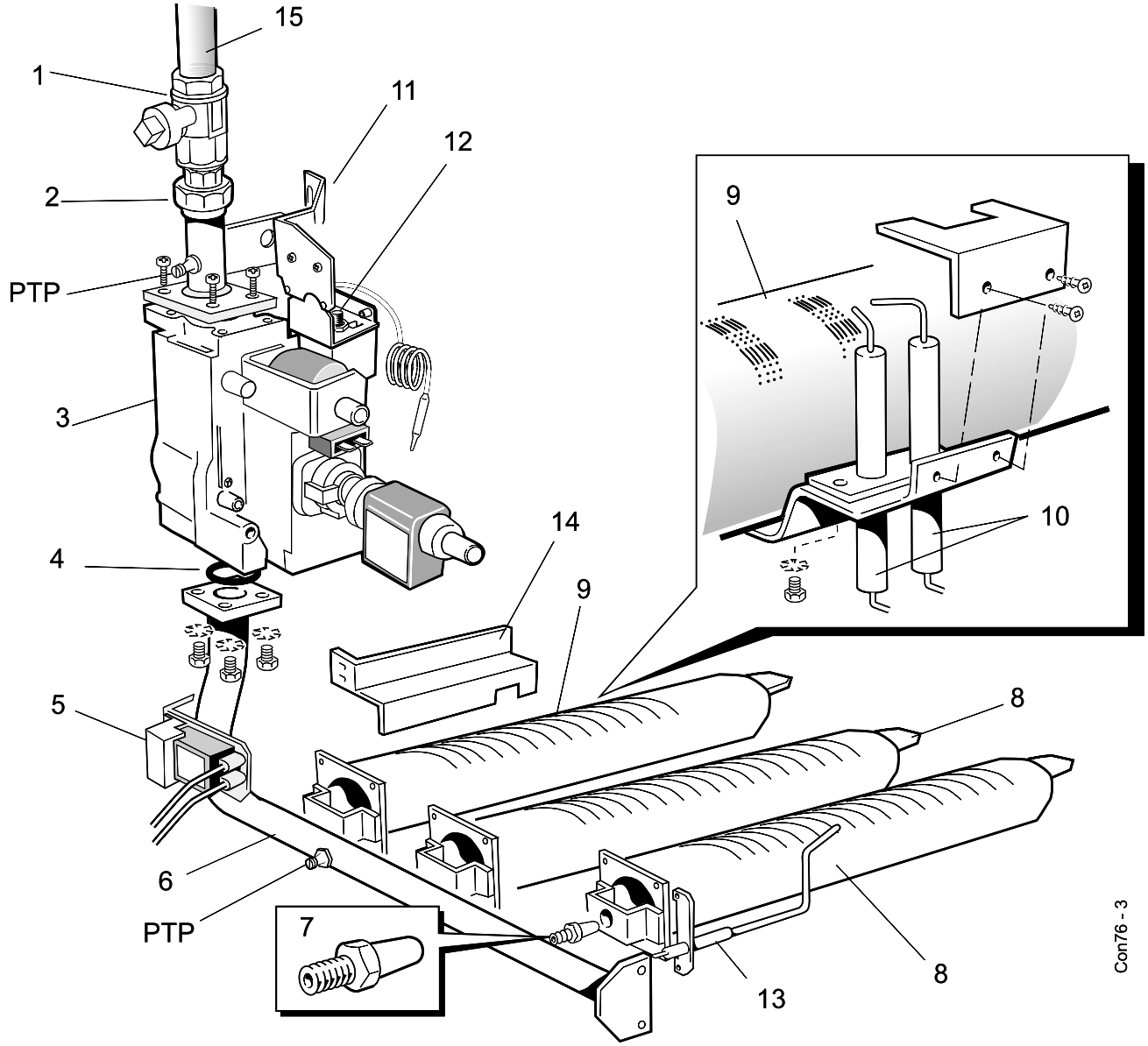

## 42 BURNER AND CONTROLS ASSEMBLY - Exploded View - CXC 94 & 116

**LEGEND**

1. Main gas inlet cock.
2. Gas inlet union.
3. 'O' ring seal.
4. Gas control valve, Low.
5. Gas control valve, High.
6. Spark generator.
7. Burner manifold.
8. Main injector, 3 off.
9. Main (centre/RH) burner, 2 off.
10. Main (LH) burner, 1 off.
11. Ignition electrodes.
12. Overheat thermostat mounting bracket.
13. Overheat thermostat.
14. Detection electrode assembly.
15. Gas pipe.
16. Gas restrictor.

**PTP** Pressure test point

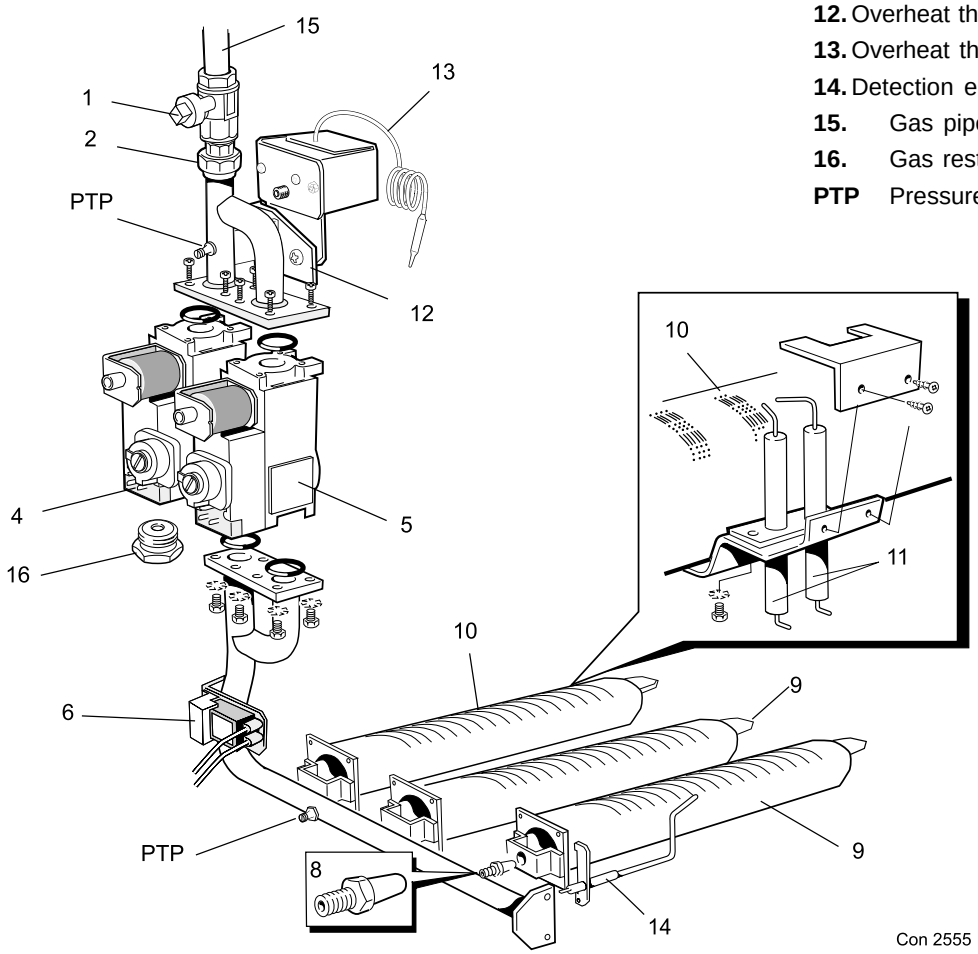


## 43 OVERHEAT THERMOSTAT

1. Remove the split pin from the overheat thermostat pocket and remove the phial.
2. Loosen the 2 - M3 screws and remove the thermostat assembly from its fixing bracket.
3. Undo R.H. M4 screw and remove the thermostat cover.
4. Undo the 2 x M4 screws or the centre M10 thin nut, remove the wires and reconnect them to the new thermostat body as follows:

| 'stats numbered | 'stats numbered | CXC only |
|---|---|---|
| **1, 2, 3** | **C, 1, 2** | |
| No. 2. | No.1 | Pink |
| No.3 | No. 2. | - |
| No.1 | C. | Pink |

Reconnect the earth terminal.

5. Reassemble in reverse order.

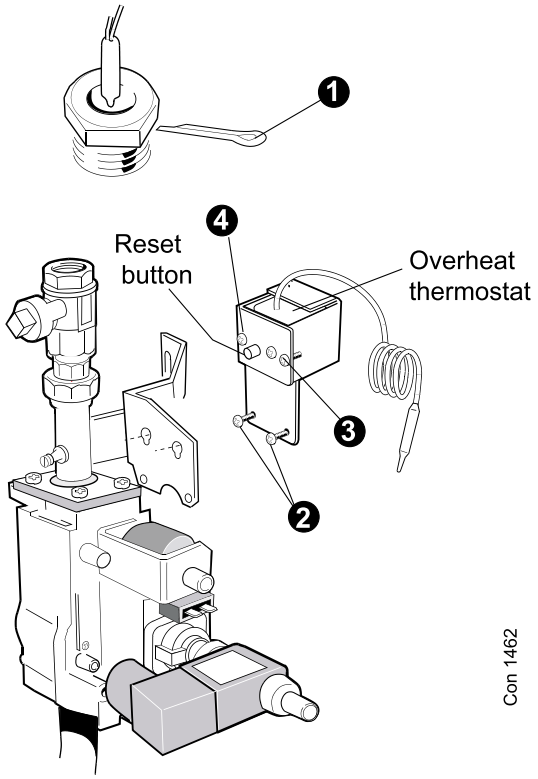

## 44 CONTROL BOX - Exploded View

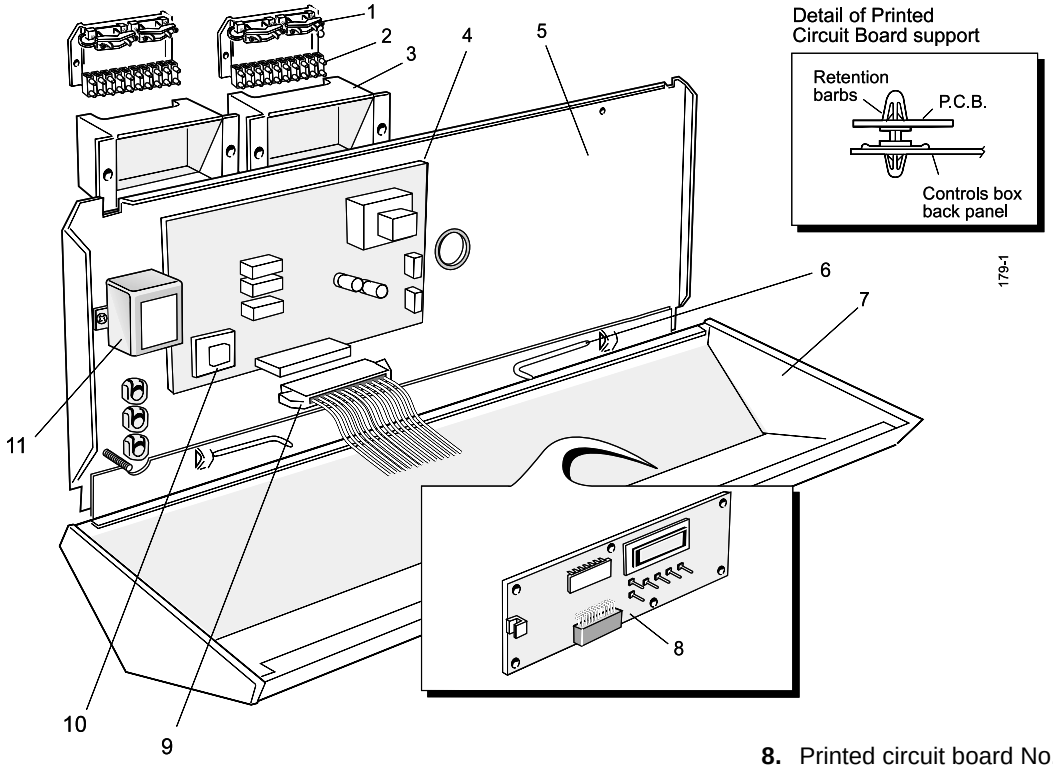


**LEGEND**

1. Wiring clamp.
2. Connection box plug.
3. Connection box.
4. Printed circuit board No. 34.
5. Back panel.
6. Hinge pin.
7. Controls box.
8. Printed circuit board No. 35.
9. Ribbon cable.
10. Printed circuit board No. RTC/34.
11. EMC Filter
12. Controls box fascia (not shown).

## 45 CONTROL SENSOR

1. Remove the upper front panel and lower top panel.
2. Remove the sensor from the thermostat pocket in the rear heat exchanger section by removing the Heyco bush.
3. Trace the lead back to the connector box behind the control box. Release the connector box plug (Frame 43).
4. Replace the sensor and reassemble in reverse order. Ensure that the lead is rerouted along the casing in the clips provided and check that the sensor is correctly fitted and secured in the thermostat pocket.

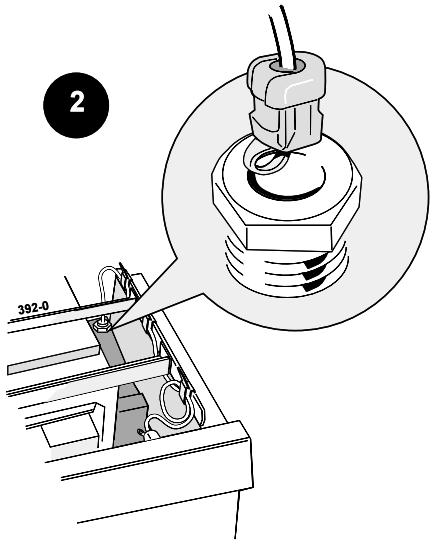


## 46 PC BOARD NO. 34

1. Remove the lower front panel.
2. Slacken the 2 screws securing the control box front panel. Carefully lift it up and hinge forward.
3. Release the ribbon cable from PCB No. 34 by pushing the retaining tabs sideways.
4. Release all plug connections from the board.
5. Remove the real time clock board (PCB No. RTC/34) from PCB No. 34 by squeezing the 4 mounting pins and pulling forwards.
6. Release PCB No. 34 from the 9 plastic mounting pins and replace the board.
7. Reassemble in reverse order.

## 47 PC BOARD NO. 35

1. Remove the lower front panel.
2. Slacken the 2 screws securing the control box front panel. Carefully lift it up and hinge forward.
3. Release the ribbon cable plug from PCB No. 35.
4. Release PCB No.35 from the 6 plastic mounting pins and replace the board.
5. Reassemble in reverse order.

## 48 PC BOARD NO. RTC/34

1. Remove the lower front panel.
2. Slacken the 2 screws securing the control box front panel. Carefully lift it up and hinge forward.
3. Remove the real time clock board (PCB No. RTC/34) from PCB No.34 by squeezing the 4 mounting pins and pulling forwards.
4. Reassemble in reverse order.

## 49 COMBUSTION CHAMBER INSULATION REPLACEMENT

The insulation boards used in the combustion chambers of these products contain man-made fibres, refractory fillers, organic and inorganic binders and as such are deemed to be harmless to humans.

**Caradon Plumbing Limited**, however, recommend that for your own comfort and to comply with good working practise the procedure described below is followed.

**IMPORTANT. Turn OFF** the gas and **DISCONNECT** the electricity supply.

To replace the insulation boards the major boiler components (including the heat exchanger and burners) have to be removed to gain access to the combustion chamber.

**Prior to removal of the boards the following protective equipment should be worn:**

- Face mask supplied with the spare part.
- Gloves supplied with the spare part.

1 Damp down the combustion chamber area containing the insulation boards.

2. Remove the insulation boards. The replacement boards are supplied in a plastic bag. This bag should be retained and the discarded boards should now be placed into it.

3. Sweep any dampened particles and place in the plastic bag.

4. Fit new insulation boards.

5. Remove the gloves and face mask and place them in the plastic bag.

6. Wash your hands and any areas of skin which may have come into contact with any of the particles from the insulation board.

7. Seal the plastic bag and dispose of it and its contents into a commercial tip.

## 50 AIR PRESSURE SWITCH

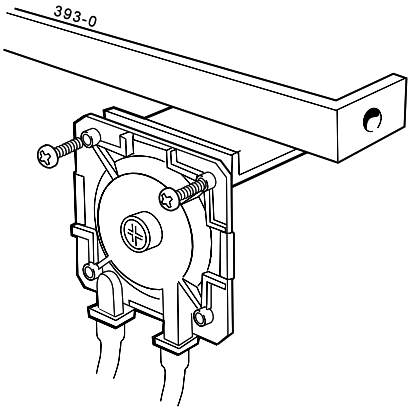


Before replacing the pressure switch, the pressure switch reading should be checked as follows:

Connect the positive side of a manometer to the pressure sensing line from the fan scroll and the negative side of the manometer to the pressure sensing line connected to the flue box.

Switch the boiler on. When the fan starts, the combined pressure (cold) should be at least that shown in the table below:

| | | | |
|---|---|---|---|
| **CXC 48** | 3.4mbar | **CXC 94** | 2.7mbar |
| **CXC 70** | 3.2mbar | **CXC 116** | 2.4mbar |

If the pressure does not reach this level it is unlikely to be a pressure switch fault. Check that the fan impeller is clean and free to rotate and that the flue system and boiler flue ways are free from obstruction.

Do not attempt to adjust the pressure switch setting.

To replace the pressure switch, remove the upper front casing panel.

1. Unscrew the pressure switch from its mounting bracket. Transfer the electrical connections and sensing pipes to the new pressure switch.
2. Reassemble in reverse order.

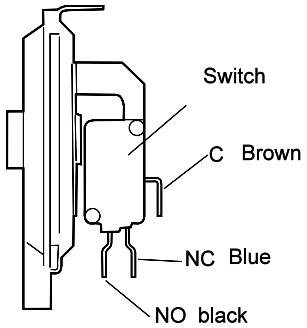


**Side Elevation**

## 51 FAN REPLACEMENT

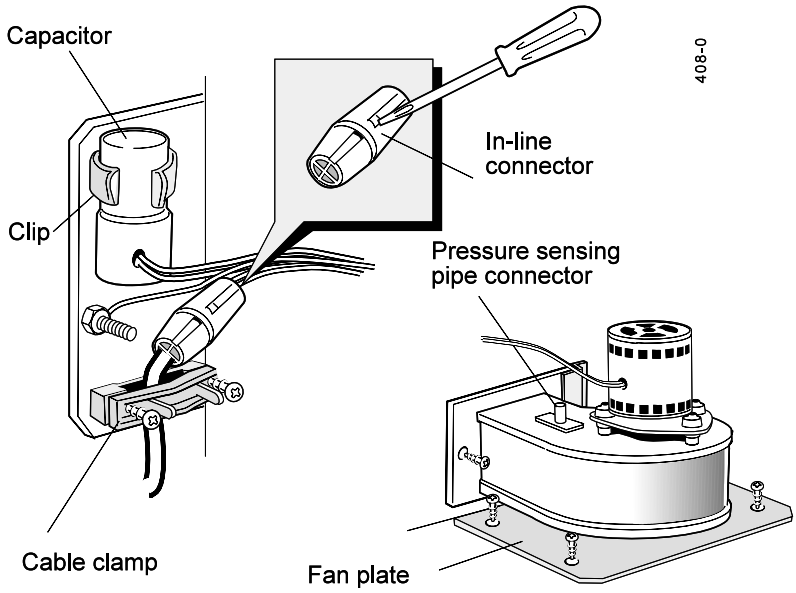


1. Remove the casing upper front panel and lower top panel.
2. Hinge the cleanout cover insulation upward and to the left. Remove front access cover (secondary h/exchanger) insulation by releasing from the retention tabs.
3. Unclip the capacitor.
4. Disconnect the earth lead.
5. Separate the inline connector, using a small screwdriver.
6. Remove the pressure sensing pipe.
7. Unscrew the 5 screws securing the fan assembly and remove the assembly by pivoting it to the right.
8. Unscrew the fan from the fan plate, replace the fan and reassemble in reverse order.
9. Check that the fan outlet gasket is intact. Replace if necessary. Reassemble in reverse order.
10. Recommission the boiler and check for leakage around the fan outlet before refitting the insulation and casing panels.
11. If any leaks are evident immediate steps must be taken to rectify them.

## 52 FLOAT SWITCH REPLACEMENT

1. Unscrew the screw located on the top edge of the upper front panel and remove this panel.
2. Remove the lower top panel.
3. Unplug the Temp/Air/Float plug-in connector from its connection box located on the RH side and behind the control box.
4. Disconnect the wires from the terminal block. Refer to Frame 15.
5. The rear panel (2nd down from the top) is held by 4 screws. Remove the screws and the panel to access the float switch.
6. Remove the 2 screws and take off the saddle bracket.
7. Turn the hexagon nut anticlockwise to remove the tension in the seal then withdraw the switch.
8. Fit the new switch, with the line mark at the bottom, ensuring the float is able to fall from the horizontal - see diagram.
9. Replace the saddle bracket.
10. Run electrical leads through the clips and wire into the plug-in connector.
11. Fit the plug-in connector and replace all the panels.

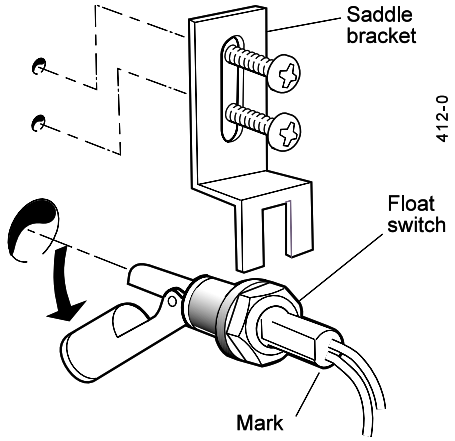


## 53 BOILER CONTROL

***WARNING***.
*The ON/STANDBY [1/0] button does **NOT** electrically isolate the boiler.*

Before attempting any electrical fault finding ALWAYS carry out the preliminary electrical system checks as detailed in the Instructions for the British Gas Multimeter or other similar commercially available meter.

The preliminary electrical system checks are the FIRST electrical checks to be carried out during a fault finding procedure.

On completion of any service/fault finding task which has required the breaking and remaking of electrical connections the following checks MUST be repeated:

- **a.** Earth continuity
- **b.** Polarity
- **c.** Resistance to earth

Detailed instructions on the replacement of faulty components are contained in the 'Servicing' section of these Installation & Servicing Instructions.

### GENERAL INFORMATION

If a flow switch is not connected to the boiler a link should be fitted between the 2 terminals for the flow switch. If the terminals are left disconnected the display will indicate "No flow" and the boiler will not operate.

Anticycle will be in operation each time the boiler thermostat is satisfied and a rapid demand for heat is required. The same situation will occur if the external controls operate rapidly. This feature reduces component wear and ensures continuous troublefree operation. The anticycle duration is one to three minutes.

If the system pump, with a maximum current of 3A, is connected to the boiler pump terminals, pump overrun will be in operation if the flow temperature is greater than 75 °C, when the heat demand is satisfied, and will continue to run until the boiler flow is less than 75 °C. If the flow temperature is less than 75 °C when the demand for heat is satisfied then the pump will cease to operate.

Frost protection is inbuilt with the boiler. If the flow temperature falls to approximately 3 °C then the boiler will operate until the flow temperature exceeds 4 °C. If an external frost thermostat is required the internal programmer should be set to 24 hours under the programme status menu and an external programmer and frost thermostat wired and connected to the volt-free external control terminals on the boiler.

There is an option kit available with 2 sets of volt-free contacts. One set of volt-free contacts is for 'Lockout' and 'Overheat' combined, and one set of volt-free contacts is for 'Boiler run'.

There is an option kit available to enable temperature compensation to be used. The outside temperature adjusts the boiler flow temperature to satisfy the heating load and ensure efficient boiler operation.

The gas valves operate on a **High/Low** and **Off** principle. At start up, with the flow temperature less than 55 °C, the boiler will start at low rate and after one to three minutes the high rate gas valve will open. On reaching the set point, determined by the user, the boiler will go to low rate and when the temperature reaches the set point plus 3 °C the low rate gas valve will close. When the temperature falls 2 °C the boiler will start at low rate and remain there until the temperature falls to the set point less 2 °C then the high rate gas valve will operate. On start up the high rate gas valve will operate immediately after detection if the boiler flow rate is greater than 55 °C.

In order to determine the continued correct operation of the control every 4 hours the boiler will shut down for a maximum of 30 seconds to do a self -check operation and restart automatically.

The control will display the number of operational hours of the boiler to the nearest hour and cannot be reset.

The boiler thermostat has a range of 60-80 °C, in 1 °C steps, with an accuracy of ± 2 °C and hysteresis of 3 °C.

The full sequence control enables 5 attempts at ignition, with 1 minute intervals between attempts, followed by nonvolatile lockout if detection does not take place.

If the [0/1] switch on the front panel is at 'Standby.....0' then the pump will continue to run indefinitely. In this state the frost protection can not operate.

In 'Lockout' the pump will continue to run only if the temperature is greater than 75 °C if it is less then the pump will be off.

### FAULT FINDING

## 54 BOILER CONTROL - continued

The boiler control has a unique fault diagnostic feature which can, in the unlikely event of a failure, display a message indicating the nature of the fault to assist a speedy and effective repair.

The faults that are diagnosed are:

- overheat thermostat
- pump
- boiler sensor
- gas valve(s)
- air pressure switch
- fan
- float switch
- outside sensor (if fitted)

with indication of combustion lockout.

In the unlikely event of a fault the display will indicate precisely the fault and give a step by step indication of the method of correcting the fault.

If the HT generator should cease to function it is impossible to automatically display this condition. Should this fault occur then:- DETECTION FAULT would be displayed and the subsequent display screens would direct attention to the spark generator.

Should a gas valve fail the diagnostics will indicate that it is valve 1 or 2 that is at fault. If the boiler has a gas line of 2 double solenoids the diagnostics will indicate which solenoid of the double solenoid is at fault.

The last fault instruction will be retained.

**FAULT CODES**

Fault codes numbered 1 to 24 are displayed where applicable. In this event contact **Caradon Plumbing Limited.**

## 55 SIMPLE FLOW CHART OF OPERATION

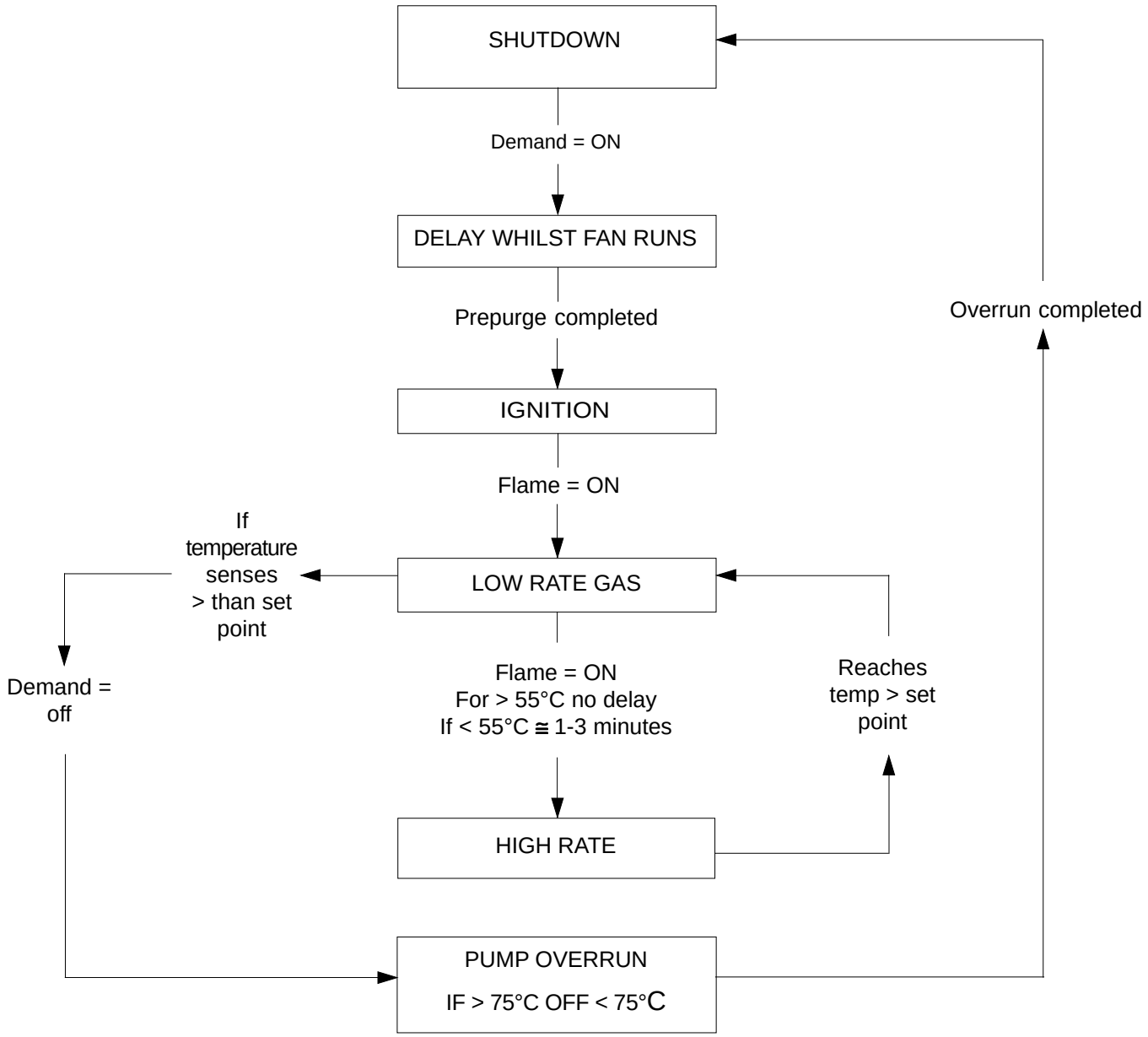

## 56 FAULT FINDING DIAGNOSTIC CHART

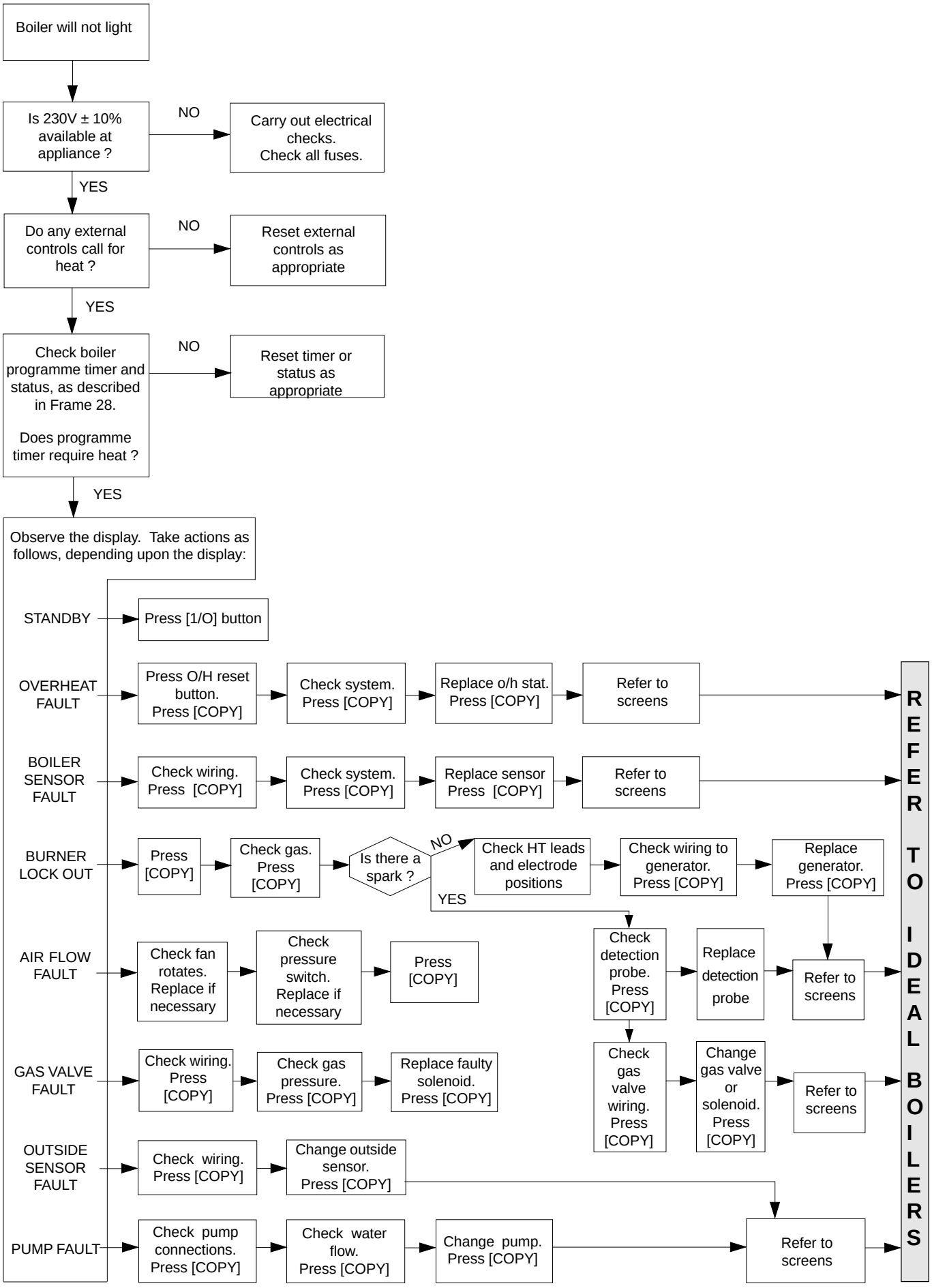

## SHORT LIST OF PARTS

The following are parts commonly required as replacements due to damage or expendability. Their failure or absence is likely to affect the safety and/or performance of this appliance.

When ordering spare parts please quote:

1. Boiler model
2. Boiler serial no. (refer to data plate on the combustion chamber)
3. Boiler B.G. P.I. No. (refer to the data plate on the combustion chamber)
4. Description
5. Quantity
6. Product no.

| Key No. | Description | Qty. | Product No. |
|---|---|---|---|
| 9 | Float switch | 1 | 013 950 |
| 19 | Pressure switch Assy ..... CXC 48 | 1 | 139 560 |
| | ..... CXC 70 | 1 | 139 561 |
| | ..... CXC 94 | 1 | 139 562 |
| | ..... CXC116 | 1 | 139 563 |
| 21 | Fan Assy (less restrictor plate) | 1 | 077 124 |
| 22 | Restrictor plate ..... CXC 48 | 1 | 138 689 |
| | ..... CXC 70 | 1 | 138 690 |
| | ..... CXC 94 | 1 | 138 691 |
| | ..... CXC116 | 1 | 138 692 |
| | Gas control valves | | |
| 28 | HONEYWELL VR4605PB 2003 ..... CXC 48 & 70 | 1 | 111 867 |
| 28A | HONEYWELL VR4605A 1104 ..... CXC 94 & 116 | 1 | 138 896 |
| 28B | HONEYWELL VR4605AB 1019 ..... CXC 94 & 116 | 1 | 111 869 |
| 28C | Plug - gas valve ..... CXC 48 & 70 | 1 | 111 872 |
| 28D | Plugs and leads - gas valve ..... CXC 94 & 116 | 1 | 112 430 |
| 28E | Plugs and leads - gas valve ..... CXC 94 & 116 | 1 | 112 431 |
| 28F | Plugs and leads - gas valve ..... CXC 48, 70 94, 116 | 1 | 111 870 |
| 28J | Gas valve restrictor ..... CXC 94 to 116 | 1 | 150 371 |
| 29 | Spark generator assy. (generator and terminals) | 1 | 112 721 |
| 31 | Main burner injectors ..... Size 3.4 mm; CXC 48 | 3 | 111 323 |
| | ..... Size 4.12mm; CXC 70 | 3 | 111 325 |
| | ..... Size 4.86mm; CXC 94 | 3 | 013 177 |
| | ..... Size 5.3mm; CXC116 | 3 | 013 179 |
| 32 | Detection electrode BE/3459/SI | 1 | 112 364 |
| 33 | Main burners ..... Worgas 70.4.111 CXC 48 | 2 | 150 149 |
| | ..... Worgas 70.4.117 CXC 70 | 2 | 150 150 |
| | ..... Worgas CXC 94 | 2 | 139 826 |
| | ..... Worgas 70.4.115 CXC116 | 2 | 150 152 |
| 34 | Main burner ..... Worgas 70.4.112 CXC 48 | 1 | 150 153 |
| | ..... Worgas 70.4.118 CXC 70 | 1 | 150 154 |
| | ..... Worgas CXC 94 | 1 | 139 827 |
| | ..... Worgas 70.4.116 CXC116 | 1 | 150 156 |

## SHORT LIST OF PARTS

| Key No. | Description | Qty. | Product No. |
|---|---|---|---|
| 36 | Ignition electrode BE/3417/SI | 1 | 112 365 |
| 38 | Overheat thermostat - RAK 77.4/3835 | 1 | 153 914 |
| 45 | Control box assembly complete | 1 | 112 125 |
| 46 | Thermistor | 1 | 112 289 |
| 47 | PCB 34 | 1 | 112 718 |
| 48 | PCB 35 | 1 | 112 719 |
| 49 | Real time clock | 1 | 112 749 |
| 50 | PCB 34 and real time clock | 1 | 112 722 |
| 51 | Ribbon cable | 1 | 112 720 |
| 54 | Casing upper front control panel (less controls) - white stove enamel | 1 | 076 947 |
| 56 | Casing assembly, complete - white stove enamel ..... CXC 48 | 1 | 139 488 |
| | ..... CXC 70 | 1 | 139 489 |
| | ..... CXC 94 | 1 | 139 490 |
| | ..... CXC116 | 1 | 139 491 |
| 57 | Casing lower front panel - white stove enamel | 1 | 076 948 |
| 58 | Casing LH side panel - white stove enamel (including nutserts, clips & studs) CXC 48 | 1 | 077 725 |
| | ..... CXC 70 | 1 | 077 727 |
| | ..... CXC 94 | 1 | 077 729 |
| | ..... CXC116 | 1 | 077 731 |
| 59 | Casing RH side panel - white stove enamel (including nutserts, clips & studs) ..... CXC 48 | 1 | 077 726 |
| | ..... CXC 70 | 1 | 077 728 |
| | ..... CXC 94 | 1 | 077 730 |
| | ..... CXC116 | 1 | 077 732 |
| 60 | Casing lower top panel - white stove enamel ..... CXC 48 | 1 | 112 798 |
| | ..... CXC 70 | 1 | 138 387 |
| | ..... CXC 94 | 1 | 138 385 |
| | ..... CXC116 | 1 | 112 752 |
| 61 | Casing upper front panel - white stove enamel | 1 | 112 755 |
| 62 | Casing upper top panel - white stove enamel | 1 | 112 753 |
| 63 | Infill panel - upper top panel | 1 | 112 754 |
| 64 | Casing LH upper side panel - white stove enamel | 1 | 077 222 |
| 65 | Casing RH upper side panel - white stove enamel | 1 | 077 223 |
| 66 | Casing upper back panel | 1 | 112 800 |
| 67 | Casing upper middle back panel | 1 | 138 318 |
| 68 | Casing lower middle back panel | 1 | 139 205 |
| 69 | Casing lower back panel | 1 | 112 801 |

## Technical Training

The Ideal Boilers Technical Training Centre offers a series of first class training courses for domestic, commercial and industrial heating installers, engineers and system specifiers. For details of courses please ring: ..... 01482 498 432

**Ideal Boilers**, P.O. Box 103, National Ave, Kingston upon Hull, HU5 4JN. Telephone: 01482 492 251 Fax: 01482 448 858. Registration No. London 322 137.

**Caradon Ideal Limited** pursues a policy of continuing improvement in the design and performance of its products. The right is therefore reserved to vary specification without notice.

May 2002 UIN 138 423 A06

Caradon
Ideal Limited

***Ideal Installer/Technical Helpline: 01482 498 376***
***www.idealboilers.com***

## *Your feedback*
### *and your chance to win a free boiler*

At Ideal we've been leaders in the design and engineering of robust and reliable boilers for over 90 years. We want to continue as leaders by listening to your suggestions for how to improve our boilers and our service. We'll be giving away a free boiler for the five best ideas every year (to be selected by our Technical Director). Please complete this form, using extra sheets if required, and post it or fax it to us on 01482 498699.

**Boiler details**

Model / Size *(e.g. Classic RS 230, Mexico CF 3/60 etc. Details on control panel door)*

Date of Installation

**Installer details**

Name

Address

Post Code

Telephone (*Please include STD code*)

**How I would improve this boiler:**

**My general comments for Ideal:**

Caradon
Ideal Limited

***Ideal Installer/Technical Helpline: 01482 498 376***
***www.idealboilers.com***

# *Further information*

If you would like information about Ideal Boilers please complete this sheet and fax it to us on 01482 498699 or post it to Caradon Ideal Limited, PO Box 103, National Avenue, Kingston upon Hull, HU5 4JN.

## *Installer details*

Name

Address

Post Code

Telephone (*Please include STD code*)

## *General information required*

- ☐ *Please send me details of Ideal Training Courses.*
- ☐ *Please arrange for a technical representative to contact me.*
- ☐ *Please arrange for me to join an Ideal factory tour.*

## *Brochures required*

- ☐ *The Ideal Guide: a specifier's and installer's introduction to the Ideal domestic boiler range.*
- ☐ *The Ideal Householders Guide: to assist the installer when presenting to his/her customers.*

## *Technical brochures required*

- ☐ *The Ideal C class combi boiler*
- ☐ *The Ideal Classic wall hung boiler*
- ☐ *The Ideal Classic System wall hung boiler*
- ☐ *The Ideal Classic LX Deluxe wall hung boiler*
- ☐ *The Ideal Mexico floor standing boiler*
- ☐ *The Ideal Minimiser heat-saving boiler*
- ☐ *The Ideal Response combi boiler*
- ☐ *The Ideal Response SE super efficiency combi boiler*
- ☐ *The Ideal Systemiser SE super efficiency system boiler*
- ☐ *The Ideal Concord high output boiler*
- ☐ *The Ideal Buccaneer oil fired boiler*

**Caradon**

**Ideal Limited**

Caradon Plumbing Ltd., PO Box 103, National Avenue, Kingston upon Hull, HU5 4JN. Telephone: 01482 492251 Fax: 01482 448858.

***Ideal Installer/Technical Helpline: 01482 498 376***

***www.idealboilers.com***

U.I.N. 138 423 A0